Adaptec® SmartRAID 3100 and SmartHBA 2100 Installation and User Guide

Table of Contents

1. About This Guide

This Installation and User's Guide explains how to install and setup your SmartRAID 3200 or SmartHBA 2200 Series Host Bus Adapter, including driver installation, BIOS operations, troubleshooting tips, and instructions for flashing the adapter firmware.

These SmartRAID 3200 Series adapter models are described in this guide:

- Adaptec SmartRAID Ultra 3258P-32i /e
- Adaptec SmartRAID Ultra 3258P-16i /e
- Adaptec SmartRAID 3258-16i /e
- Adaptec SmartRAID 3254-16i /e
- Adaptec SmartRAID Ultra 3254-16e
- Adaptec SmartRAID 3254-8i
- Adaptec SmartRAID 3252-8i
- Adaptec SmartRAID 3204-8i

These SmartHBA 2200 Series adapter models are described in this guide:

- Adaptec SmartHBA 2200-16i

1.1 What You Need to Know Before You Begin

This guide is written for data storage and IT professionals who are responsible for installing, configuring, and maintaining SmartHBA 2100/SmartRAID 3100 Series Host Bus Adapters in computers or servers in a "cloud" or data center environment. You should be familiar with computer hardware, operating system administration, data storage devices, and SAS and Serial ATA (SATA) technology.

If you are responsible for configuring the storage resources on the SmartRAID and SmartHBA adapters, you should be familiar with RAID technology and creating bootable volumes.

1.2 Terminology Used in this Guide

Many of the terms and concepts referred to in this guide are known to computer users by multiple names. This guide uses these terms:

- Host Bus Adapter or HBA (also known as controller, adapter, or I/O card)
- Disk drive (also known as hard disk, hard drive, or hard disk drive)
- Solid State Drive (also known as SSD or non-rotating storage media)
- Enclosure (also known as a storage enclosure, disk drive enclosure, or JBOD)

1.3 How to Find More Information

You can find more information about your SmartHBA 2100/SmartRAID 3100 Series Host Bus Adapter by referring to these documents, available for download at start.adaptec.com.

- *ARCCONF Command Line Utility User's Guide for Adaptec Smart Storage Controllers*—Describes how to use the ARCCONF utility to perform configuration and storage management tasks from an interactive command line. (*ESC-2161615)*
- *SmartRAID 3200 Series and SmartHBA 2200 Series Host Bus Adapters Installation and User's Guide* (this manual)—Describes how to install SmartRAID 3200 and SmartHBA 2200 Series adapters in a computer or server, install drivers, and configure the adapter for initial use. (*DS-00004037A*)
- *Adaptec Flash Backup Module ASCM-35 and ASCM-40 Installation Instructions* (ESC-2170352)—Describes how to install the ASCM-35 and ASCM-40 Flash Backup module using the mounting plate method.

2. Kit Contents and System Requirements

This section lists the contents of your SmartHBA 2100/SmartRAID 3100 Series kit and the system requirements for successfully installing and using your adapter.

2.1 Kit Contents

SmartRAID 3200 Series kits:

- SmartRAID 3200 Series adapter
- Full-height ("FH") and Low-profile ("LP") brackets, with mounting screws
- ASCM-40F or ASCM-35F Supercap Module, including:
  - Supercap module extension cable
  - Full-height and Low-profile mounting plate, with mounting screws
  - Supercap mounting clip
  - Tie-wraps (nylon)

SmartHBA 2200 Series kits:

- SmartHBA 2200 Series adapter
- Full-height ("FH") and Low-profile ("LP") brackets, with mounting screws

Note: The latest firmware, drivers, utilities software, and documentation can be downloaded at www.microchip.com/wwwregister/default.aspx. For more information, see Downloading the Driver Package.

2.2 System Requirements

- PC-compatible computer with Intel Pentium, or equivalent, processor
- 4 GB of RAM minimum
- Available compatible PCIe slot (depending on your adapter model—see the descriptions in About Your Host Bus Adapter)
- One of these operating systems:
  - Microsoft® Windows® Server, Windows 10, Windows 8.1, Windows 7
  - Red Hat® Enterprise Linux
  - CentOS
  - SuSE Linux Enterprise Server
  - Ubuntu Linux
  - Debian Linux
  - Oracle Linux
  - Citrix Xenserver
  - Solaris
  - FreeBSD
  - VMware ESXi

  See the *Release Notes* for a complete list of supported OS versions.
- USB flash drive or CD burner, for creating driver disks and bootable media

3. About Your SmartRAID 3100 Series Host Bus Adapter

This section provides an overview of the features of the SmartRAID 3100 Series adapter.

3.1 Standard Features

- Support for SAS and SATA Hard Disk Drives (HDD) and Solid State Drives (SSD)
- UEFI pre-boot BIOS, CTRL-A configuration utility
- Flash ROM for updates to firmware and BIOS
- Up to 24 ports, 12 Gb/s I/O
- SAS 3.0, PCIe 3.0
- Low-profile MD2 form factor
- Mini-SAS HD connectors
- Cache protection with supercapacitor module
- maxCrypto Controller-Based Encryption (CBE) (SmartRAID 3162-8i /e only)
- Support for disk drive enclosures with SES2 enclosure management hardware
- Thermal sensor, with logging capabilities
- GUI and CLI management utilities
- Support for RAID 0, 1, 5, 6, 10, 50, 60
- Universal asynchronous receiver/transmitter (UART) debug/diagnostic port

Note: See the Product Brief for a complete list of supported features.

3.2 Mechanical Information

3.2.1 Board Dimensions

This table shows the board dimensions of the SmartRAID 3100 Series adapter, in inches.

Table 3-1. SmartRAID 3100 Series Board Dimensions

Dimension	Measure
Height	2.700"
Length	6.600"
PCB Thickness	0.062"
Max Component Height, Top Side	0.570"
Max Component Height, Bottom Side	0.105"

3.2.2 Heat Sink

SmartRAID 3100 Series adapters include a passive heat sink. The heat sink does not support an optional fan. The heat sink has four push-pins located at its four corners to ensure an even distribution of force across the top of the ASIC. For airflow requirements, see 14.1. Environmental Specifications.

3.3 Visual Indicators

LEDs on SmartRAID 3100 Series adapters provide a visual indication of the board hardware status and cache backup system. The LED locations vary, and may be on the front of the board or back of the board (see figures

below), and include DDR LEDs (also referred to as Flash-Based Write Cache, or FBWC, LEDs) and status LEDs. The LED states are described in the following tables.

Front panel brackets on SmartRAID 3100-4i/8i controllers have three holes for the Heartbeat LED, Fault LED, and Crypto LED.

Figure 3-1. SmartRAID 3100 Series LED Locations

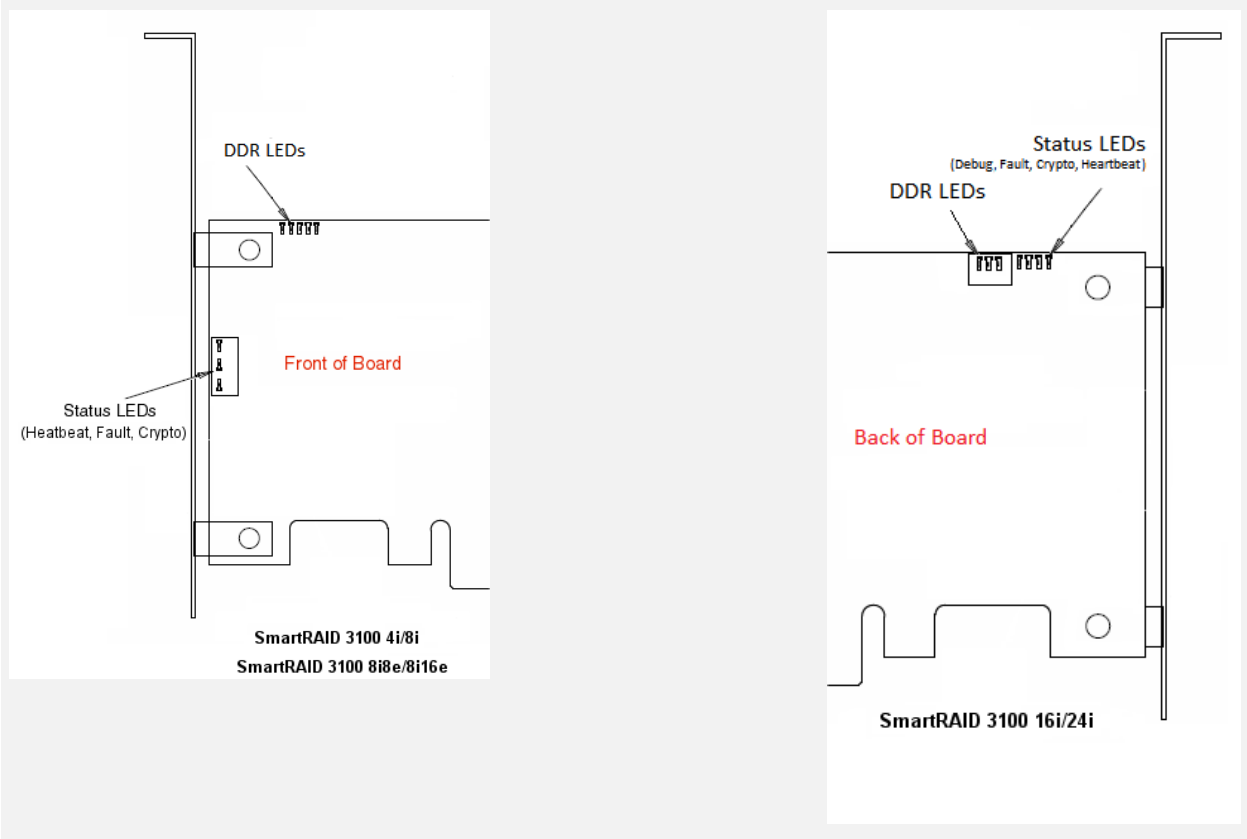

Table 3-2. SmartRAID 3100 Series Status LEDs

LED	Color	Meaning
DDR_LED1	Yellow	Cache backup error
DDR_LED2	Green	Dirty cache
DDR_LED3	Green	Charge status
HEARTBEAT	Green	Heartbeat (blinks once per/second when firmware operating normally)
FAULT	Yellow	Hardware Lockup/Fault
CRYPTO	Green	Cryptographic State: Off = NON-ENCRYPTING, On = ENCRYPTING
AVS_ENB	Green	The controller is operating normally if this LED is on or off: On = Adaptive Voltage Scaling (AVS) Enabled, Off = Adaptive Voltage Scaling (AVS) Disabled **Note:** Not supported on SmartRAID 3100-16i and SmartRAID 3100-24i adapters.

.....continued

LED	Color	Meaning
PAL_DEBUG	Yellow (8i/8e adapters) Red (16i/24i adapters)	Debug LED control signal

Table 3-3. SmartRAID 3100 Series DDR/FBWC LED States

Cache Status	DDR_LED1 (Yellow)	DDR_LED2 (Green)	DDR_LED3 (Green)	Meaning/Comments
Power-ON state	Off	1 Hz	1 Hz	Power-up
Not Charged	Off	Off	1 Hz	Backup power not ready
Battery Charged / not dirty	Off	Off	On	Backup power ready, no dirty cache
Battery Charged / dirty	Off	On	On	Backup power ready, dirty cache
No Battery	On	On	On	Cache error / Battery not connected
Over Temperature	1 Hz	On	Off	Over temperature
Backup in Progress	Off	1Hz	Off	Backup State
Backup in Flash	Off	On	1Hz	Backup State Cont. State
Backup Complete	Off	On	Off	Backup complete state
Charge Timeout	2 Hz	2 Hz	On	Battery charge timeout
General Error	On	On	On	Cache Error
Backup Incomplete	1 Hz	1 Hz	Off	Idle State & BDtF & brownout & bad volt
Backup/restore Error	On	On	Off	Backup complete state, restore error

3.4 About the Adaptec SmartRAID 3101-4i/3151-4i

The Adaptec SmartRAID 3101-4i/3151-4i is a SAS Host Bus Adapter with these features:

Figure 3-2. Adaptec SmartRAID 31x1-4i

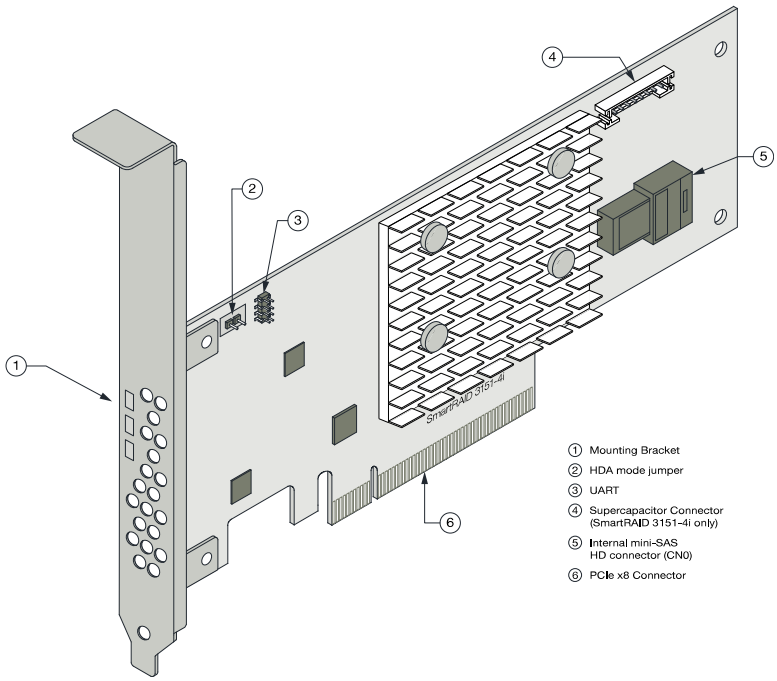

Form Factor	Low-profile MD2
Bus compatibility	PCIe 3.0
PCIe bus width	x8
Data transfer rate	12 Gb/s per port
Phys (Unified Serial Ports)	4
Standard memory	32 MB Boot Flash, 256 Kb SEEPROM, 1Mb MRAM
Cache	1 GB
Connectors, internal	1 mini-SAS HD x4 (SFF-8643)
Maximum number of disk drives	4 direct-attached (or up to 238 with expanders)
Enclosure Support	SES2, SES3, IBPI and SGPIO
Encryption	No
Thermal sensor	Inlet ambient temperature, ASIC die temperature, Top-side board ambient temperature, Bottom-side board ambient temperature
Cache Protection/Backup	**SmartRAID 3101-4i**: No (non-upgradeable) **SmartRAID 3151-4i**: Integrated ASCM-35F backup module with external supercapacitor

3.5 About the Adaptec SmartRAID 3101E-4i

The Adaptec SmartRAID 3101E-4i is a SAS Host Bus Adapter with these features:

Figure 3-3. Adaptec SmartRAID 3101E-4i

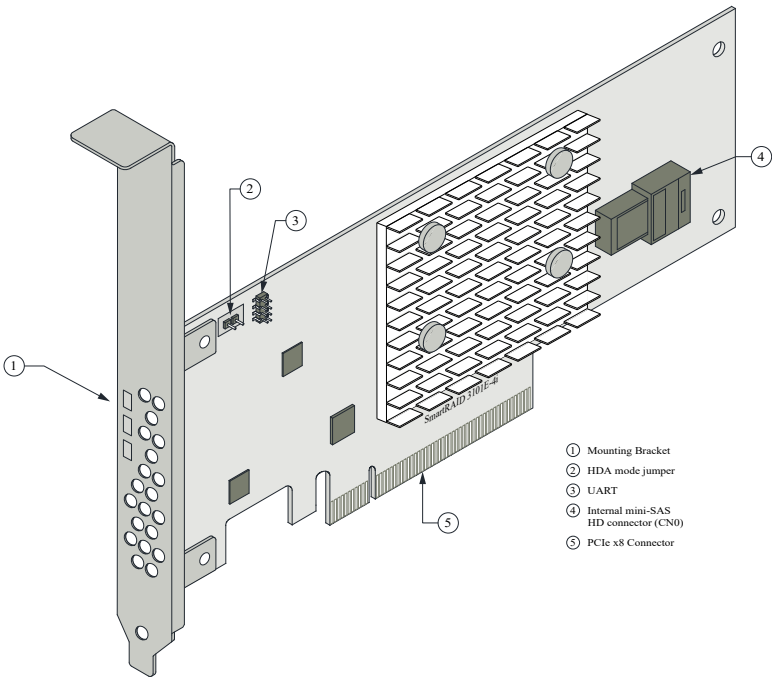

Form Factor	Low-profile MD2
Bus compatibility	PCIe 3.0
PCIe bus width	x8
Data transfer rate	12 Gb/s per port
Phys (Unified Serial Ports)	4
Standard memory	32 MB Boot Flash, 256 Kb SEEPROM, 1Mb MRAM
Cache	1 GB
Connectors, internal	1 mini-SAS HD x4 (SFF-8643)
Maximum number of disk drives	4 direct-attached
Enclosure Support	SES2, SES3, IBPI and SGPIO
Expander Support	No (no drives of any type detected if connected via expander)
Encryption	No
Thermal sensor	Inlet ambient temperature, ASIC die temperature, Top-side board ambient temperature, Bottom-side board ambient temperature
Cache Protection/Backup	No (non-upgradeable)

3.6 About the Adaptec SmartRAID 3102-8i/3152-8i/3154-8i

The Adaptec SmartRAID 3102-8i/3152-8i/3154-8i is a SAS Host Bus Adapter with these features:

Figure 3-4. Adaptec SmartRAID 31xx-8i

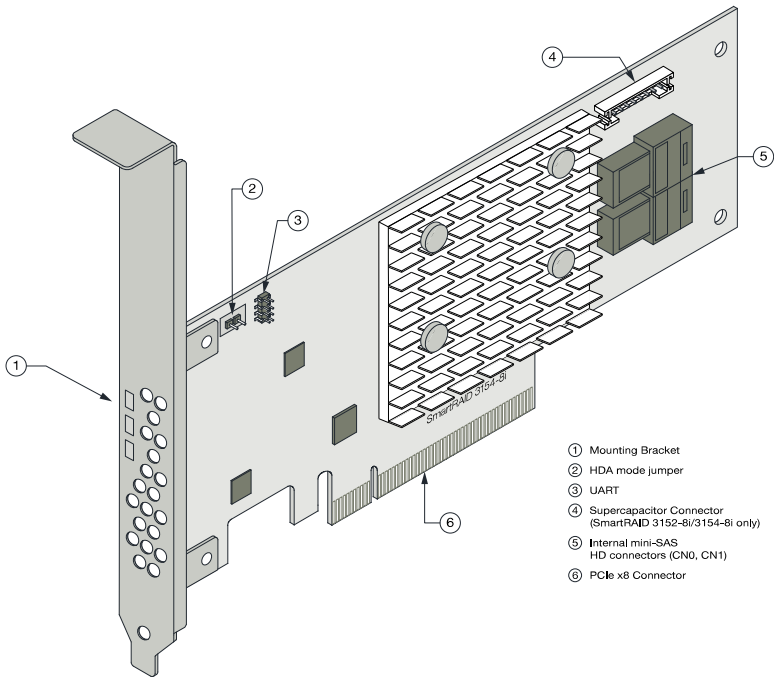

Form Factor	Low-profile MD2
Bus compatibility	PCIe 3.0
PCIe bus width	x8
Data transfer rate	12 Gb/s per port
Phys (Unified Serial Ports)	8
Standard memory	32 MB Boot Flash, 256 Kb SEEPROM, 1Mb MRAM
Cache	**SmartRAID 3102-8i/3152-8i**: 2 GB **SmartRAID 3154-8i**: 4 GB
Connectors, internal	2 mini-SAS HD x4 (SFF-8643)
Maximum number of disk drives	8 direct-attached (or up to 246 with expanders)
Enclosure Support	SES2, SES3, IBPI and SGPIO
Encryption	No
Thermal sensor	Inlet ambient temperature, ASIC die temperature, Top-side board ambient temperature, Bottom-side board ambient temperature
Cache Protection/Backup	**SmartRAID 3102-8i**: No (non-upgradeable) **SmartRAID 3152-8i/3154-8i**: Integrated ASCM-35F backup module with external supercapacitor

3.7 About the Adaptec SmartRAID 3102E-8i

The Adaptec SmartRAID 3102E-8i is a SAS Host Bus Adapter with these features:

Figure 3-5. Adaptec SmartRAID 3102E-8i

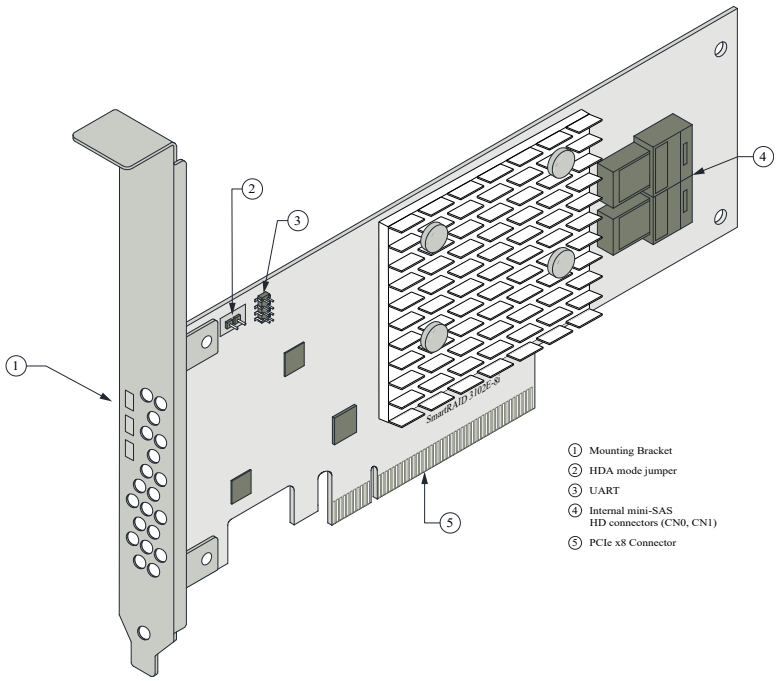

Form Factor	Low-profile MD2
Bus compatibility	PCIe 3.0
PCIe bus width	x8
Data transfer rate	12 Gb/s per port
Phys (Unified Serial Ports)	8
Standard memory	32 MB Boot Flash, 256 Kb SEEPROM, 1Mb MRAM
Cache	2 GB
Connectors, internal	2 mini-SAS HD x4 (SFF-8643)
Maximum number of disk drives	8 direct-attached
Enclosure support	SES2, SES3, IBPI and SGPIO
Expander support	No (no drives of any type detected if connected via expander)
Encryption	No
Thermal sensor	Inlet ambient temperature, ASIC die temperature, Top-side board ambient temperature, Bottom-side board ambient temperature
Cache Protection/Backup	No (non-upgradeable)

3.8 About the Adaptec SmartRAID 3154-8e

The Adaptec SmartRAID 3154-8e is a SAS Host Bus Adapter with these features:

Figure 3-6. Adaptec SmartRAID 3154-8e

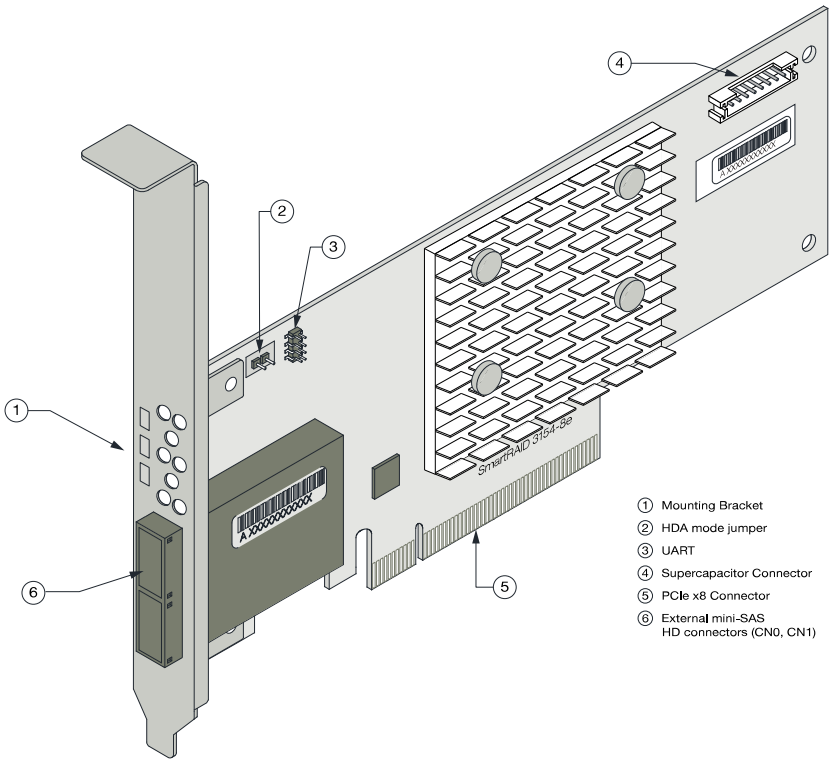

Form Factor	Low-profile MD2
Bus compatibility	PCIe 3.0
PCIe bus width	x8
Data transfer rate	12 Gb/s per port
Phys (Unified Serial Ports)	8
Standard memory	32 MB Boot Flash, 256 Kb SEEPROM, 1 Mb MRAM
Cache	4 GB
Connectors, external	2 mini-SAS HD x4 (SFF-8644)
Maximum number of disk drives	8 direct-attached (or up to 254 with expanders)
Enclosure Support	SES2, SES3, IBPI and SGPIO
Encryption	No
Thermal sensor	Inlet ambient temperature, ASIC die temperature, Top-side board ambient temperature, Bottom-side board ambient temperature
Cache Protection/Backup	Integrated ASCM-35F backup module with external supercapacitor

3.9 About the Adaptec SmartRAID 3154-8i8e

The Adaptec SmartRAID 3154-8i8e is a SAS Host Bus Adapter with these features:

Figure 3-7. Adaptec SmartRAID 3154-8i8e

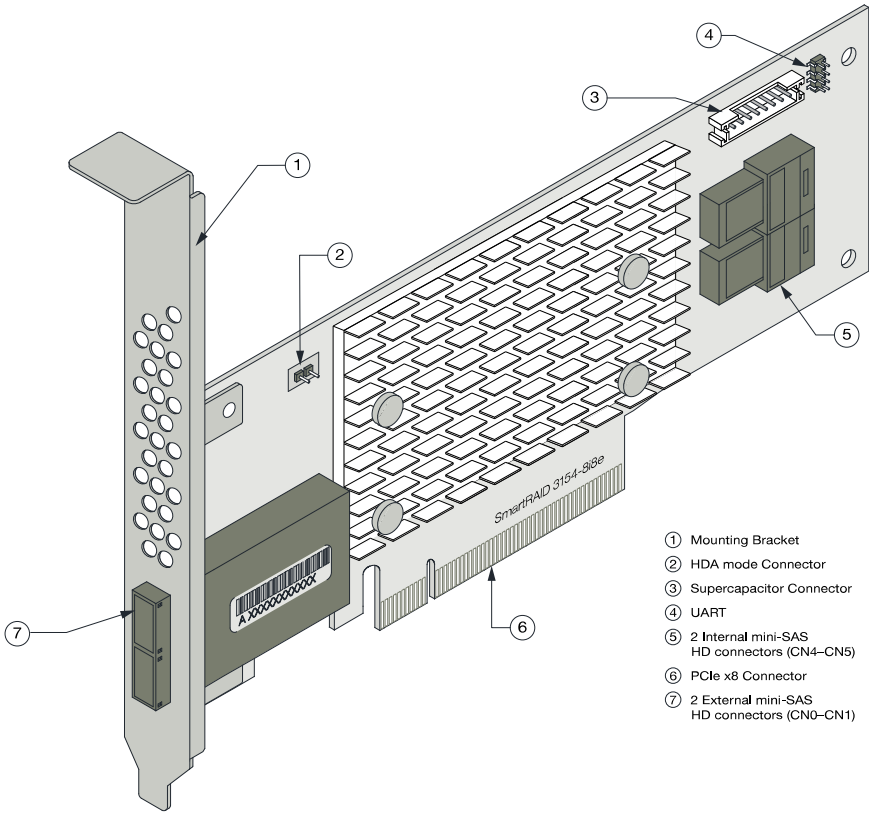

Form Factor	Low-profile MD2
Bus compatibility	PCIe 3.0
PCIe bus width	x8
Data transfer rate	12 Gb/s per port
Phys (Unified Serial Ports)	16
Standard memory	32 MB Boot Flash, 128 Kb SEEPROM, 128 KB MRAM
Cache	4 GB
Connectors, internal	2 mini SAS HD x4 (SFF-8644) and 2 mini SAS HD x4 (SFF-8643)
Maximum number of disk drives	16 direct-attached (or up to 246 with expanders)
Enclosure Support	SES2, SES3, IBPI and SGPIO
Thermal sensor	Processor temperature, Ambient temperature
Cache Protection/Backup	Integrated ASCM-35F backup module with external supercapacitor

3.10 About the Adaptec SmartRAID 3154-8i16e

The Adaptec SmartRAID 3154-8i16e is a SAS Host Bus Adapter with these features:

Figure 3-8. Adaptec SmartRAID 3154-8i16e

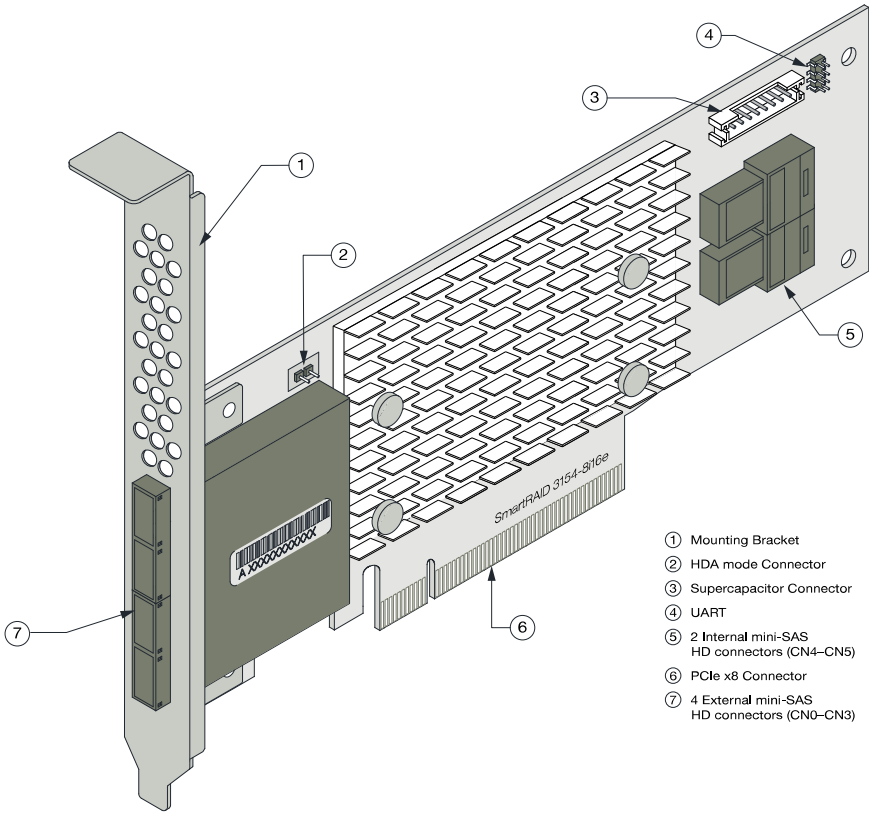

Form Factor	Low-profile MD2
Bus compatibility	PCIe 3.0
PCIe bus width	x8
Data transfer rate	12 Gb/s per port
Phys (Unified Serial Ports)	24
Standard memory	32 MB boot flash, 128 Kb SEEPROM, 128 KB MRAM
Cache	4 GB
Connectors, internal	4 mini SAS HD x4 (SFF-8644) and 2 mini SAS HD x4 (SFF-8643)
Maximum number of disk drives	24 direct-attached (or up to 246 with expanders)
Enclosure Support	SES2, SES3, IBPI and SGPIO
Thermal sensor	Processor temperature, Ambient temperature
Cache Protection/Backup	Integrated ASCM-35F backup module with external supercapacitor

3.11 About the Adaptec SmartRAID 3154-16i

The Adaptec SmartRAID 3154-16i is a SAS Host Bus Adapter with these features:

Figure 3-9. Adaptec SmartRAID 3154-16i

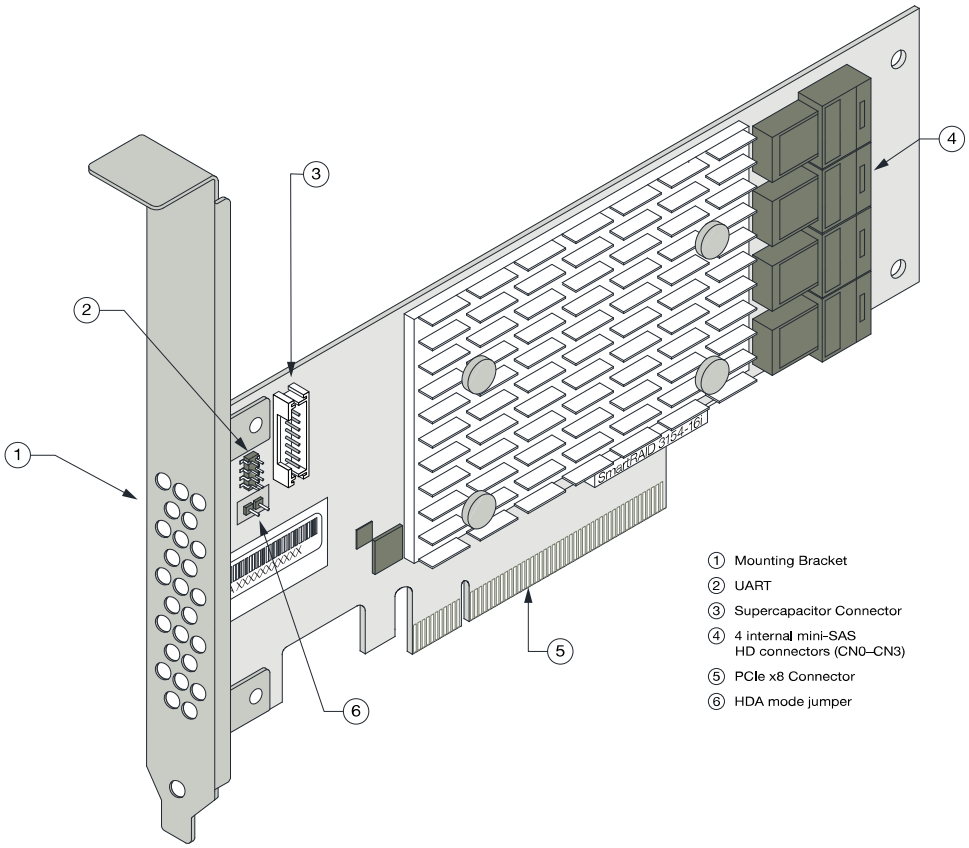

Form Factor	Low-profile MD2
Bus compatibility	PCIe 3.0
PCIe bus width	x8
Data transfer rate	12 Gb/s per port
Phys (Unified Serial Ports)	16
Standard memory	32 MB boot flash, 128 Kb SEEPROM, 128 KB MRAM
Cache	4 GB
Connectors, internal	4 mini-SAS HD x4 (SFF-8643)
Maximum number of disk drives	16 direct-attached (or up to 238 with expanders)
Enclosure Support	SES2, SES3, IBPI and SGPIO
Thermal sensor	Processor temperature, Ambient temperature
Cache Protection/Backup	Integrated ASCM-35F backup module with external supercapacitor

3.12 About the Adaptec SmartRAID 3154-24i

The Adaptec SmartRAID 3154-24i is a SAS Host Bus Adapter with these features:

Figure 3-10. Adaptec SmartRAID 3154-24i

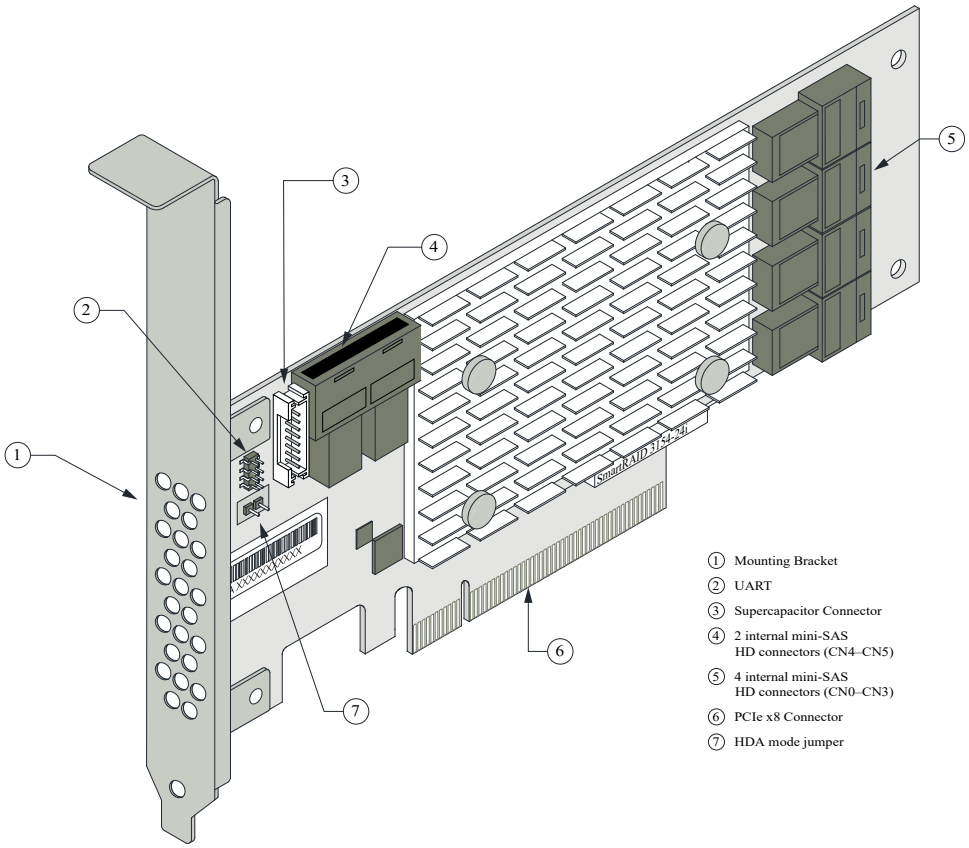

Form Factor	Low-profile MD2
Bus compatibility	PCIe 3.0
PCIe bus width	x8
Data transfer rate	12 Gb/s per port
Phys (Unified Serial Ports)	24
Standard memory	32 MB Boot Flash, 128 Kb SEEPROM, 128 KB MRAM
Cache	4 GB
Connectors, internal	6 mini-SAS HD x4 (SFF-8643)
Maximum number of disk drives	24 direct-attached (or up to 230 with expanders)
Enclosure Support	SES2, SES3, IBPI and SGPIO
Thermal sensor	Processor temperature, Ambient temperature
Cache Protection/Backup	Integrated ASCM-35F backup module with external supercapacitor

3.13 About the SmartRAID 3162-8i/SmartRAID 3162-8i /e Adapter

The SmartRAID 3162-8i/SmartRAID 3162-8i /e is a SAS Host Bus Adapter with these features:

Figure 3-11. Adaptec SmartRAID 3162-8i

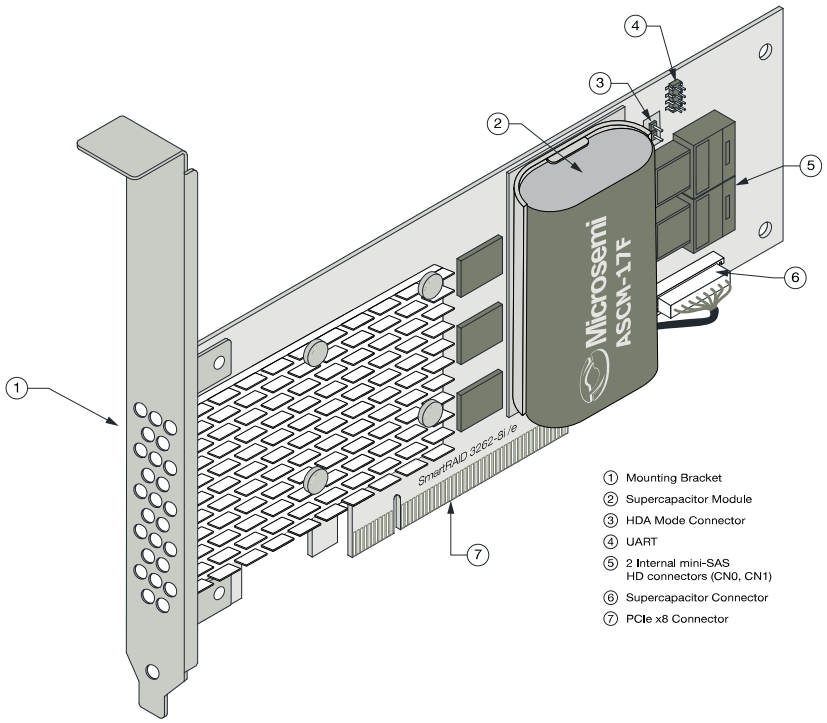

Form Factor	Low-profile MD2
Bus compatibility	PCIe 3.0
PCIe bus width	x8
Data transfer rate	12 Gb/s per port
Phys (Unified Serial Ports)	8
Standard memory	32 MB Boot Flash, 16 KB Boot SEEPROM, 128 KB MRAM, 256 KB Crypto SEEPROM (SmartRAID 3162-8i /e only)
Cache	2 GB
Connectors, internal	2 mini-SAS HD x4 (SFF-8643)
Maximum number of disk drives	8 direct-attached (or up to 246 with expanders)
Enclosure Support	SES2, SES3, IBPI and SGPIO
maxCrypto Controller-Based Encryption	**SmartRAID 3162-8i**: No **SmartRAID 3162-8i /e**: Yes
Thermal sensor	Processor temperature, Ambient temperature
Cache Protection/Backup	Integrated flash backup module ASCM-17F, with board-mounted supercapacitor

4. About Your SmartHBA 2100 Series Host Bus Adapter

This section provides an overview of the features of the SmartHBA 2100 Series adapter.

4.1 Standard Features

- Support for SAS and SATA Hard Disk Drives (HDD) and Solid State Drives (SSD)
- UEFI pre-boot BIOS, CTRL-A configuration utility
- Flash ROM for updates to firmware and BIOS
- Up-to 24 ports, 12 Gbps I/O
- SAS 3.0, PCIe 3.0
- Low-profile MD2 form factor
- Mini-SAS HD connectors
- Support for disk drive enclosures with SES 2.x/3.x inband support, TWI, IBPI and SGPIO enclosure management
- Thermal sensors, with logging capabilities
- Support for RAID 0, 1, 5, 10

4.2 Mechanical Information

4.2.1 Board Dimensions

This table shows the board dimensions of the SmartHBA 2100 Series adapters, in inches.

Table 4-1. SmartHBA 2100 Series Board Dimensions

Dimension	SmartHBA 2100-4i4e	SmartHBA 2100-8i
Height	2.70"	2.712"
Length	5.20"	6.60"
PCB Thickness	0.062"	0.062"
Max Component Height, Top Side	0.570"	0.570"
Max Component Height, Bottom Side	0.105"	0.105"

4.2.2 Heat Sink

SmartHBA 2100 Series adapters include a passive heat sink capable of bi-directional airflow. The heat sink does not support an optional fan. The heat sink has four push-pins located at its four corners to ensure an even distribution of force across the top of the ASIC.

4.3 Visual Indicators

LEDs on the SmartHBA 2100 Series adapters provide a visual indication of the board hardware status. The LED locations vary, and may be on the front of the board or back of the board (see figures below). The LED states are described in the following table.

Figure 4-1. SmartHBA 2100 Series LED Locations

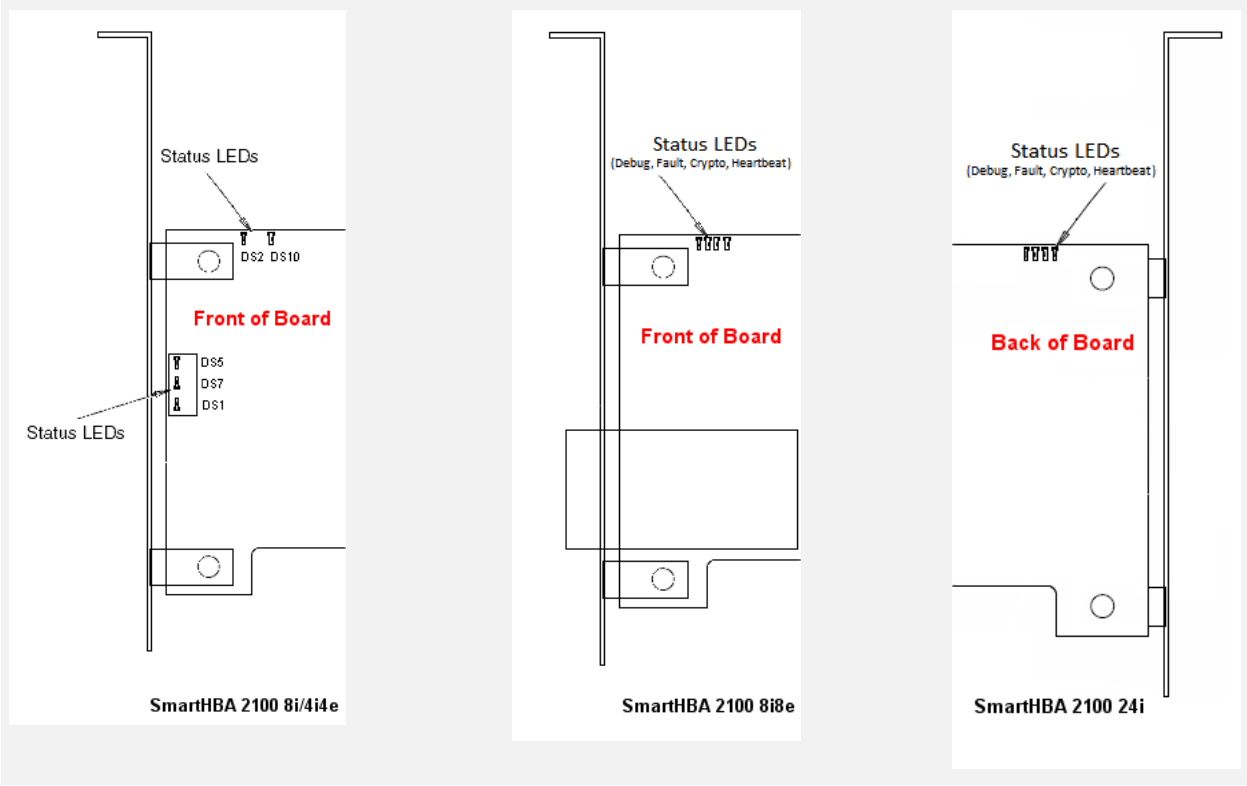

Table 4-2. SmartHBA 2100 Series Status LEDs

LED	Color	Meaning
HEARTBEAT (DS5)	Green	Heartbeat (blinks once per second when firmware is operating normally)
FAULT (DS7)	Yellow	Hardware Lockup/Fault
CRYPTO (DS1)	Green	Cryptographic State: always off. SmartHBA 2100 Series adapters do not support encryption.
AVS_ENB (DS2)	Green	On=Adaptive Voltage Scaling (AVS) enabled, Off=Adaptive Voltage Scaling (AVS) disabled
PAL_DEBUG (DS10)	Red	Debug LED control signal

4.4 About the Adaptec SmartHBA 2100-4i4e

The Adaptec SmartHBA 2100-4i4e is a SAS Host Bus Adapter with these features:

Figure 4-2. Adaptec SmartHBA 2100-4i4e

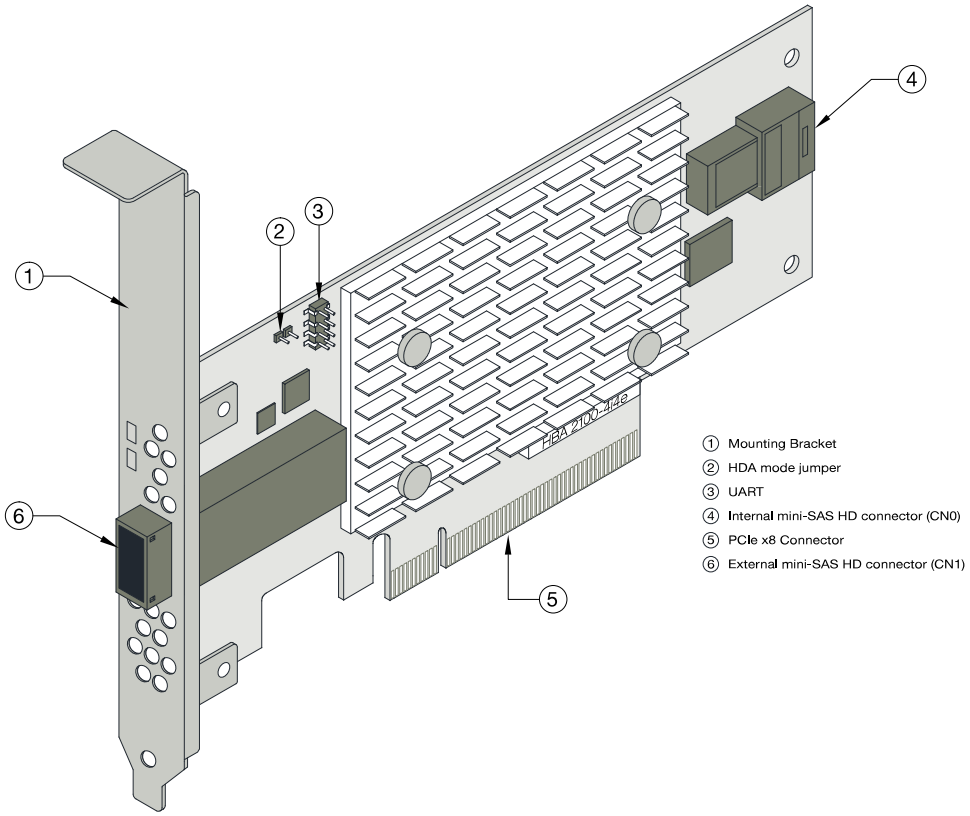

Form Factor	PCIe Low-profile MD2 (smaller than MD2)
Bus compatibility	PCIe 3.0
PCIe bus width	x8
Data transfer rate (SAS)	12 Gbps per port
Phys (Unified Serial Ports)	8
Standard memory	32 MB Boot Flash, 16 KB SEEPROM, 128 KB MRAM
Connectors, internal	1x1 mini-SAS HD x4 (SFF-8643)
Connectors, external	1x1 mini-SAS HD x4 (SFF-8644)
Maximum number of disk drives	4/port direct-attached (or up to 250 with expanders)
Enclosure Support	SES 2.x/3.x inband support, TWI, IBPI and SGPIO
Thermal sensors	Inlet ambient temperature, ASIC die temperature, Top-side board ambient temperature, Bottom-side board ambient temperature

4.5 About the Adaptec SmartHBA 2100-8i

The Adaptec SmartHBA 2100-8i is a SAS Host Bus Adapter with these features:

Figure 4-3. Adaptec SmartHBA 2100-8i Features

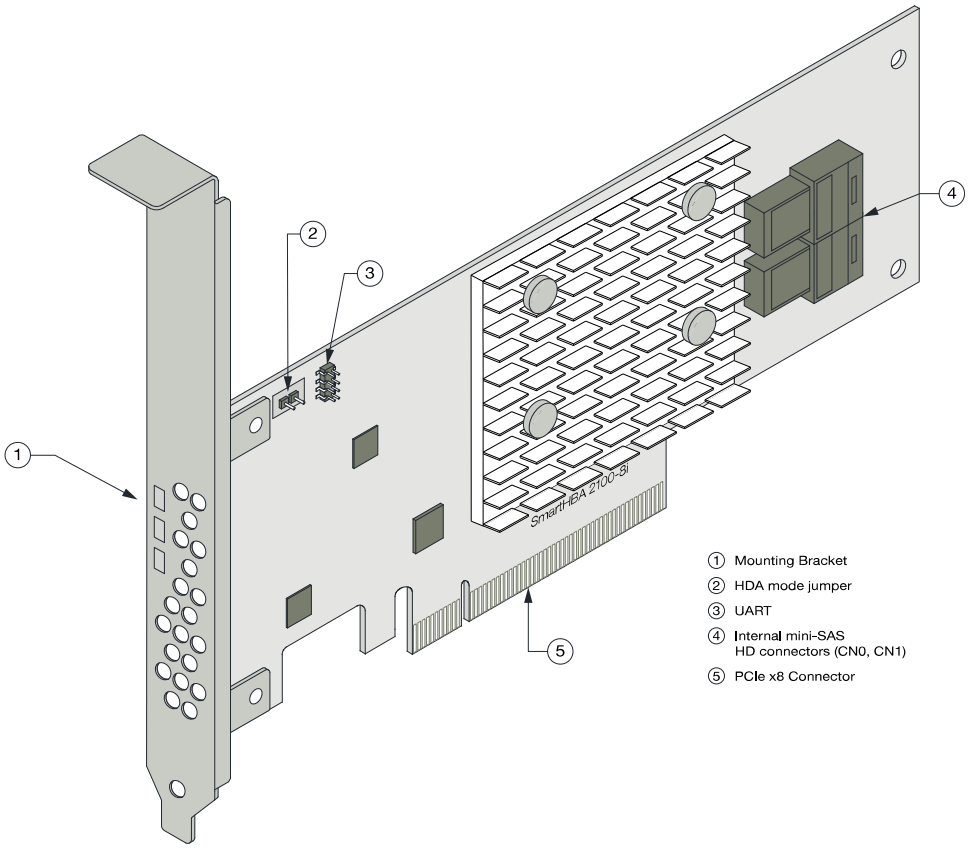

Form Factor	PCIe Low-profile MD2 (smaller than MD2)
Bus compatibility	PCIe 3.0
PCIe bus width	x8
Data transfer rate (SAS)	12 Gbps per port
Phys (Unified Serial Ports)	8
Standard memory	32 MB Boot Flash, 32 KB SEEPROM, 128 KB MRAM
Connectors, internal	1x2 mini-SAS HD x4 (SFF-8643)
Maximum number of disk drives	4/port direct-attached (or up to 246 with expanders)
Enclosure Support	SES 2.x/3.x inband support, TWI, IBPI and SGPIO
Thermal sensors	Inlet ambient temperature, ASIC die temperature, Top-side board ambient temperature, Bottom-side board ambient temperature

4.6 About the Adaptec SmartHBA 2100-8i8e

The Adaptec SmartHBA 2100-8i8e is a SAS Host Bus Adapter with these features:

Figure 4-4. Adaptec SmartHBA 2100-8i8e Features

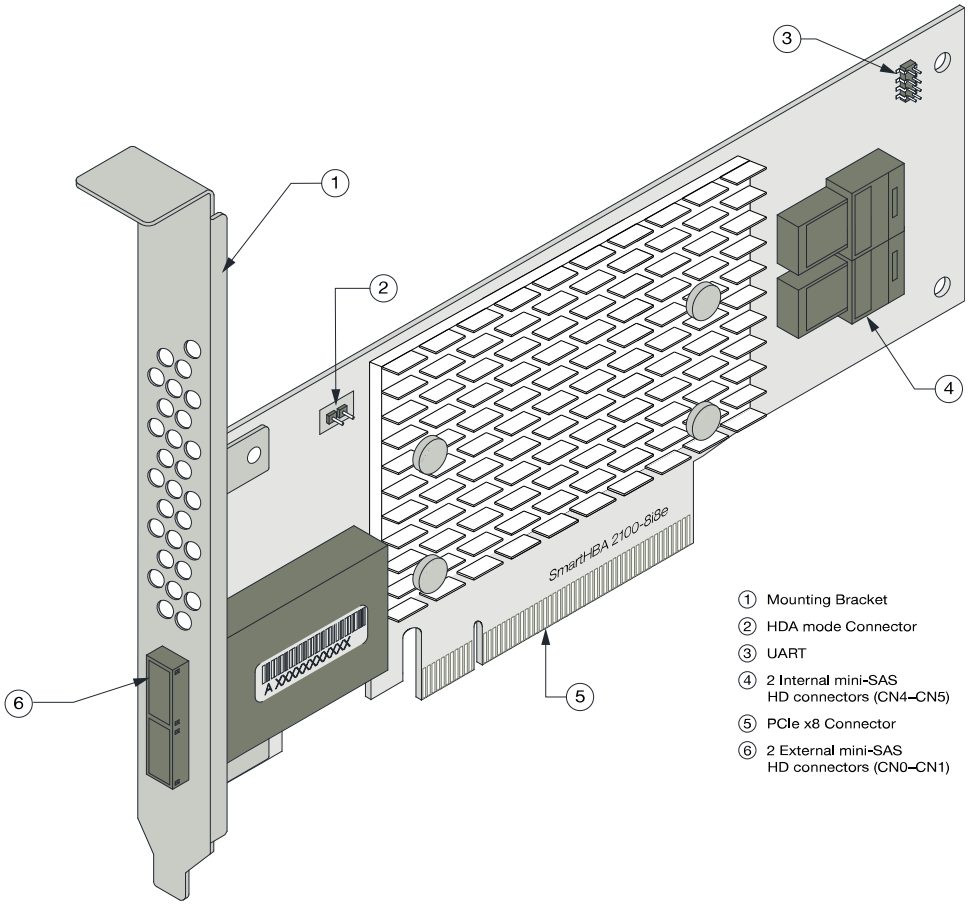

Form Factor	PCIe Low-profile MD2
Bus compatibility	PCIe 3.0
PCIe bus width	x8
Data transfer rate	12 Gb/s per port
Phys (Unified Serial Ports)	16
Standard memory	32 MB Boot Flash, 128 Kb SEEPROM, 128 KB MRAM
Connectors, internal	2 mini SAS HD x4 (SFF-8644) and 2 mini SAS HD x4 (SFF-8643)
Maximum number of disk drives	16 direct-attached (or up to 246 with expanders)
Enclosure Support	SES 2.x/3.x inband support, TWI, IBPI and SGPIO
Thermal sensor	Ambient temperature, ASIC die temperature

4.7 About the Adaptec SmartHBA 2100-16i

The Adaptec SmartHBA 2100-16i is a SAS Host Bus Adapter with these features:

Figure 4-5. Adaptec SmartHBA 2100-16i Features

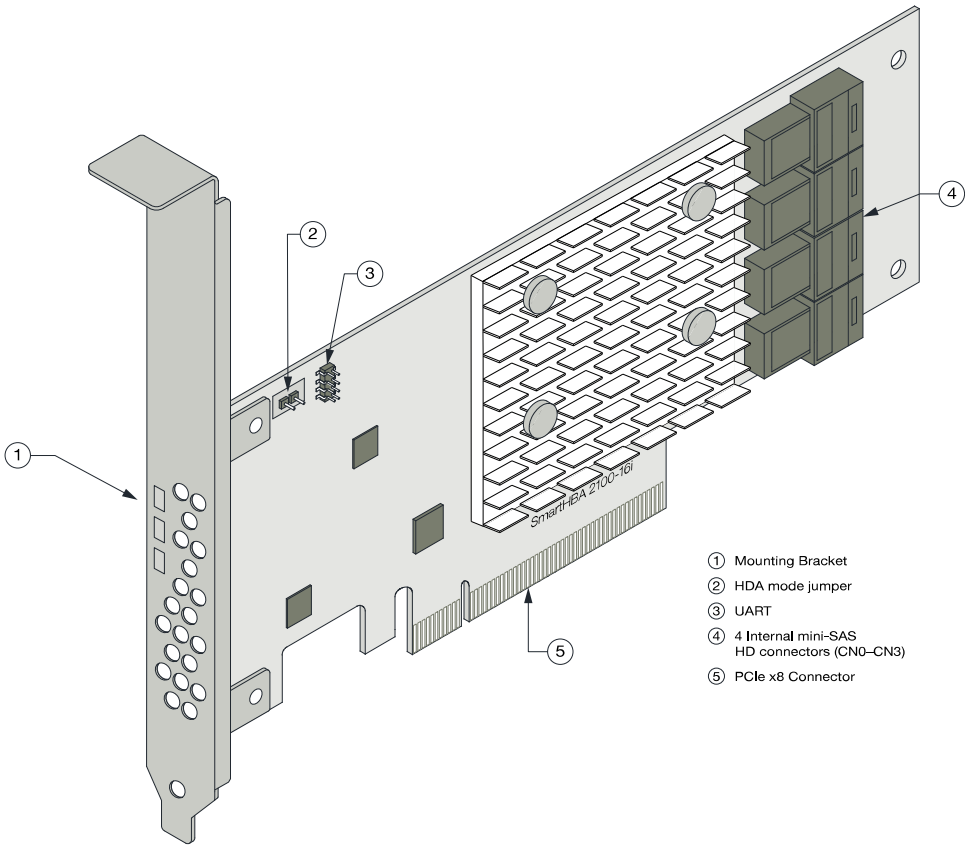

Form Factor	PCIe Low-profile MD2 (smaller than MD2)
Bus compatibility	PCIe 3.0
PCIe bus width	x8
Data transfer rate (SAS)	12 Gbps per port
Phys (Unified Serial Ports)	16
Standard memory	32 MB Boot Flash, 32 KB SEEPROM, 128 KB MRAM
Connectors, internal	4 mini-SAS HD x4 (SFF-8643)
Maximum number of disk drives	16 direct-attached (or up to 238 with expanders)
Enclosure Support	SES 2.x/3.x inband support, TWI, IBPI and SGPIO
Thermal sensors	Inlet ambient temperature, ASIC die temperature, Top-side board ambient temperature, Bottom-side board ambient temperature

4.8 About the Adaptec SmartHBA 2100-24i

The Adaptec SmartHBA 2100-24i is a SAS Host Bus Adapter with these features:

Figure 4-6. Adaptec SmartHBA 2100-24i Features

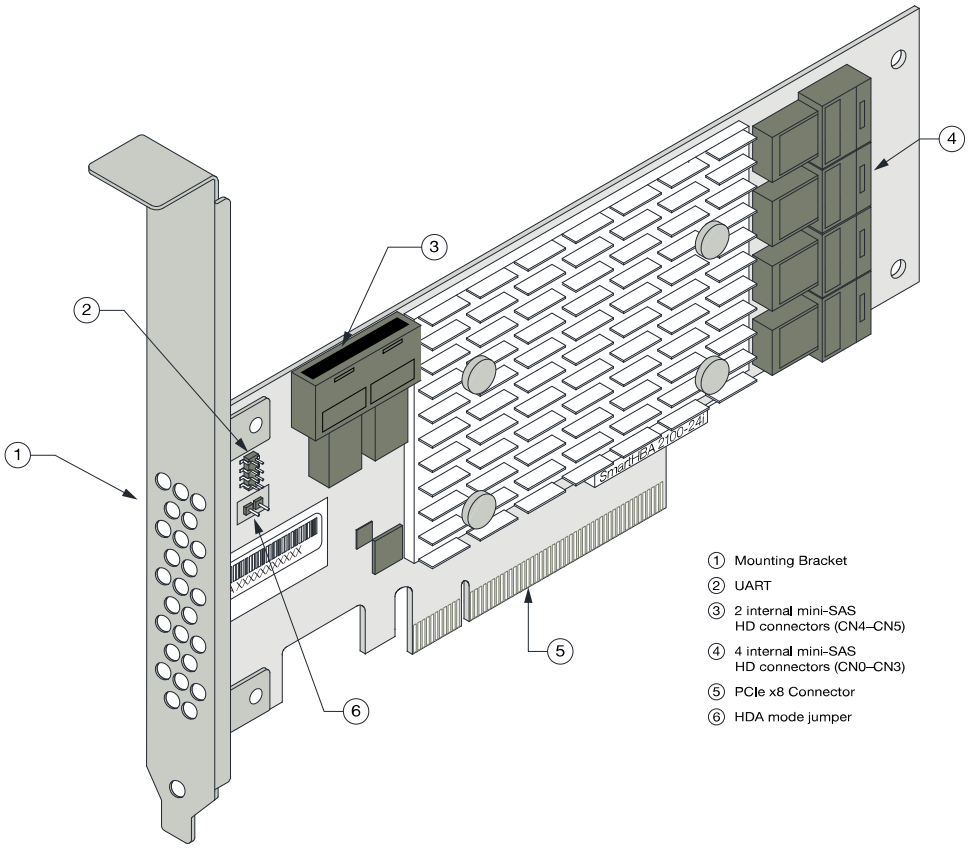

Form Factor	PCIe Low-profile MD2
Bus compatibility	PCIe 3.0
PCIe bus width	x8
Data transfer rate (SAS)	12 Gbp/s per port
Phys (Unified Serial Ports)	24
Standard memory	32 MB Boot Flash, 16 KB SEEPROM, 128 KB MRAM
Connectors, internal	6 mini-SAS HD x4 (SFF-8643)
Maximum number of disk drives	24 direct-attached (or up to 230 with expanders)
Enclosure Support	SES 2.x/3.x inband support, TWI, IBPI and SGPIO
Thermal sensors	Inlet ambient temperature, ASIC die temperature

5. Installing the Controller and Disk Drives

This section explains how to install your SmartHBA 2100/SmartRAID 3100 Series adapter in a computer cabinet or server and connect it to internal and external disk drives.

5.1 Before You Begin

- Read Safety Information.
- Familiarize yourself with your host bus adapter's physical features (see Standard Features).
- Ensure that you have the right number of disk drives for your application (see Selecting Disk Drives and Cables).

5.2 Selecting Disk Drives and Cables

5.2.1 Disk Drives

Your SmartHBA 2100/SmartRAID 3100 Series adapter supports SAS and SATA disk drives, Solid State Drives (SSDs), and SAS tape drives. For more information about compatible disk drives, refer to adaptec.com/cables.

5.2.2 Cables

Depending on your adapter model and application requirements, you can use any of the cables listed below. For more information about cabling options for your SmartHBA 2100/SmartRAID 3100 Series adapter, visit adaptec.com/cables

Note: We recommend using Microchip Adaptec SAS cables only.

SAS HD Cables

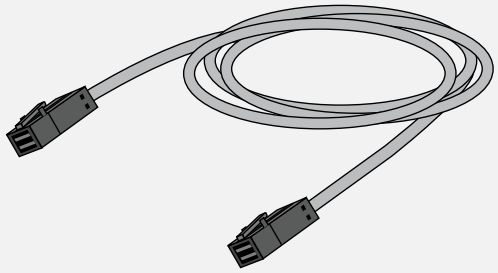

Internal Mini SAS HD to SAS HD (SFF-8643 to SFF- 8643)—Connects to a backplane or enclosure.

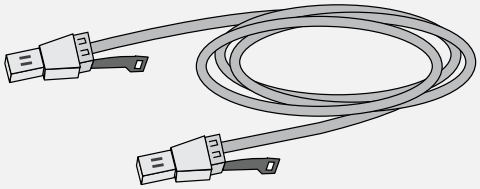

External Mini SAS HD to SAS HD (SFF-8644 to SFF- 8644)—Connects to a backplane or enclosure.

5.3 Installing the Host Bus Adapter

This section describes how to install your SmartHBA 2100/SmartRAID 3100 Series adapter in a computer cabinet or server and connect internal and external storage devices. The SmartHBA 2100/SmartRAID 3100 Series adapters have these configurations:

- Adapters with internal connectivity
- Adapters with external connectivity
- Adapters with internal and external connectivity
- Adapters with internal connectivity and an external supercapacitor module

1. Turn off your computer and disconnect the power cord and any network cables. Open the cabinet, following the manufacturer's instructions.
2. Select an available PCIe expansion slot that's compatible with your adapter model and remove the slot cover, as shown in the figure below. (To check PCIe bus compatibility of your adapter, see About Your Host Bus Adapter.)

   Note: For SmartRAID 3200 Series adapters with an external supercapacitor module, select a slot for the adapter that's next to an *empty* slot in the backplane, ideally, a short.

   ⚠ CAUTION Touch a grounded metal object before handling the adapter.

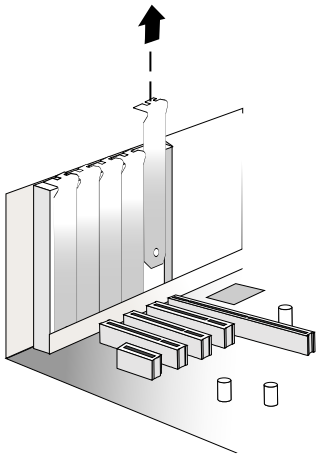

3. Insert the adapter into the expansion slot and press down gently but firmly until it clicks into place. When installed properly, the adapter should appear level with the expansion slot.

   ⚠ CAUTION Be sure to handle the adapter by its bracket or edges only. Apply pressure only on the edges when inserting the card into expansion slot.

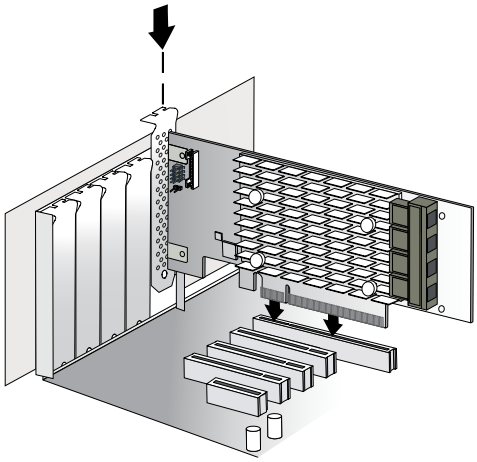

4. Secure the bracket in the expansion slot, using the retention device (for instance, a screw or lever) supplied with your computer.
5. Connect SAS HD cables between the adapter and internal or external storage devices, as required:
   - For adapters with internal ports, connect SAS HD cables between the adapter and internal disk drives or enclosures:

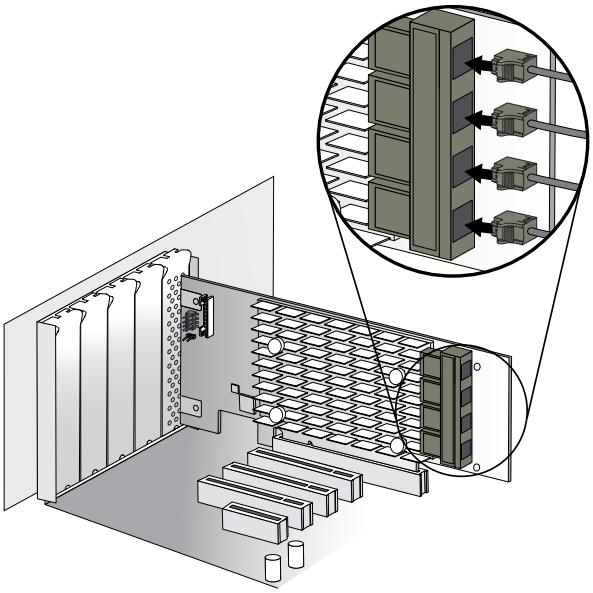

- For adapters with external ports, connect SAS HD cables between the adapter and external disk drives or enclosures:

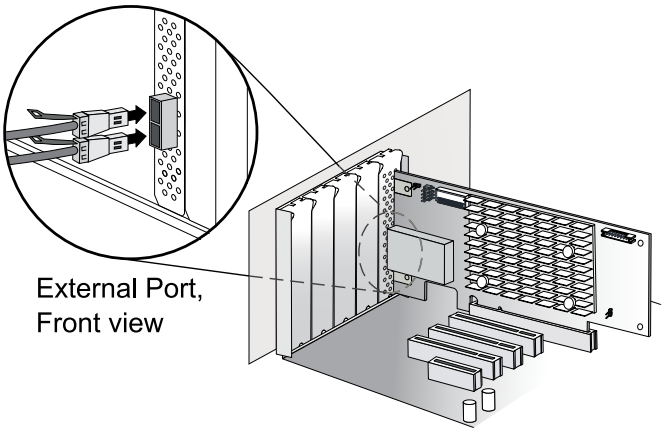
External Port,
Front view

- For adapters with with internal and external ports, connect SAS HD cables between the adapter and internal and external disk drives or enclosures:

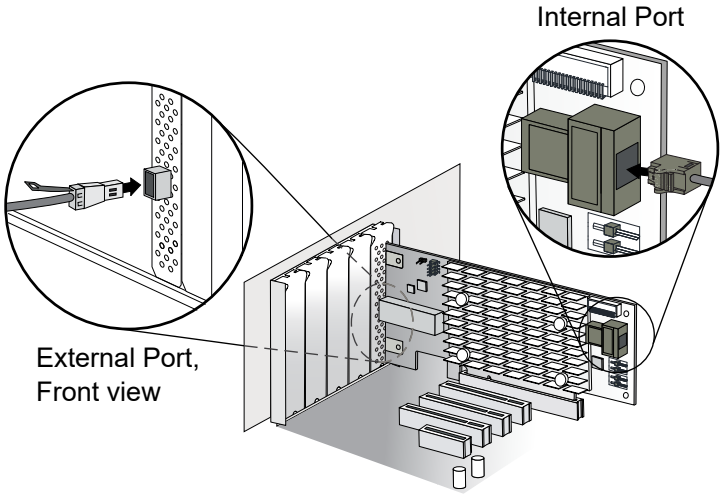

6. Close your computer cabinet, reconnect the power cord and network cables, then power up the system.

6. Installing the Driver and an Operating System

This chapter explains how to install the SmartPQI controller driver and an operating system on a bootable volume. It assumes that the SmartHBA 2100/SmartRAID 3100 is installed in a computer or server.

A compatible driver is available inbox for many operating systems. If you are installing an OS version that already has a compatible driver, install the OS normally using the available OS media or image, then update the driver later using the procedures in 7. Installing the Driver on an Existing Operating System

Note:

- For information about building the SmartPQI drivers from source, see 11. Installing the SmartPQI Drivers from Source .

6.1 Download the Driver Package

Complete these steps to download the drivers for your operating system(s):

1. Open a browser window, then type start.adaptec.com in the address bar.
2. Enter your myMicrochip account credentials.
3. Navigate to the SmartHBA 2100/SmartRAID 3100 product page.
4. Download the controller driver package (zip file archive).
5. When the download completes, extract the package contents to a temporary location on your machine. Each driver is stored in a separate folder (\windows 2016, \rhel7, \rhel6, and so on).

   Note: See the *Release Notes* for a complete list of driver files and folder structure.

6.2 Creating a Driver Disk

Create a driver disk by completing the steps below. You will need a USB flash drive to complete this task.
Note: For VMware, see 6.12. Installing with VMware.

1. Change to the driver directory for your operating system version.
2. Write the driver binary file to a USB flash drive.

   For example, if the USB drive is `/dev/sdc` on the Linux system, type (where #.#.#-### is the build number):

Option	Description
RHEL 7	`dd if=smartpqi-#.#.#-###.<rhel_version>.x86_64.dd of=/dev/sdc`
SLES 12	`dd if=smartpqi-#.#.#-###.<sles_version>.x86_64.dd of=/dev/sdc`

   Note: See the Release Notes for the latest build number.
3. Remove and label the driver disk.
4. Continue the installation with the instructions for your operating system.

6.3 Installing with Windows

Note: Use the following procedure for all supported Windows versions. You will need your Windows Installation DVD (or equivalent virtual media/iso image) to complete this task.

To install the controller SmartPQI driver while installing Windows:

1. Insert the Windows installation DVD, then restart the computer.
2. Follow the on-screen instructions to begin the Windows installation.
3. When prompted to specify a location for Windows, select **Load Driver**.
4. Insert the USB driver disk, browse to the driver location, then click **Ok**.
5. When prompted to select the driver to install, click **Next**.

6. Follow the on-screen instructions to complete the installation.

6.4 Installing with Red Hat Linux

To install the controller SmartPQI driver while installing Red Hat Linux, follow the steps in the sections below.

RHEL7 Update 6 Installation and Above

To install the RHEL7 driver with a Linux system:

1. Install the Linux system using the inbox smartpqi driver.
2. After the installation completes, install the latest smartpqi driver rpm by using the following command (where #.#.#-### is the build number and the RHEL version is formatted as follows: rhel7u9):

   ```
   rpm –ivh kmod-smartpqi-#.#.#-###.<rhel_version>.x86_64.rpm
   ```

RHEL7 Installation with Secure Boot

To install the RHEL driver with a Linux system with secure boot enabled:

Note: For more information about installing RHEL with secure boot, refer to the RedHat online resources for "Signing Kernel Modules for Secure Boot".

1. Install the Linux system using the inbox smartpqi driver in secure boot mode.
2. Enroll the Microchip public key for secure boot:
   a. Import public key:

      ```
      mokutil --import smart_driver_key_pub.der
      ```

   b. Reboot system.
   c. During boot, perform MOK key enrollment to accept the new key.
3. After the installation completes, install the signed driver rpm using the following command (where #.#.#-### is the build number):

   ```
   rpm –ivh kmod-smartpqi-#.#.#-###.<rhel_version>.x86_64.rpm
   ```

4. Reboot.

6.5 Installing with SuSE Linux Enterprise Server

To install the controller SmartPQI driver while installing SuSE Linux, follow the steps in the sections below.

Installing with SLES 12 SP3 and Above

Follow these steps to install the driver while installing SLES 12 SP5:

1. Install the Linux system using the inbox smartpqi driver.
2. After the installation completes, install the latest smartpqi driver rpm by using the following command (where #.#.#-### is the build number and the SLES version is formatted as follows: sles12sp5):

   ```
   rpm -ivh smartpqi-ueficert-#.#.#-###.<sles_version>.x86_64.rpm

   rpm -ivh smartpqi-kmp-default-#.#.#-###.<sles_version>.x86_64.rpm
   ```

SLES 12 Installation with Secure Boot

To install the SLES driver with a Linux system with secure boot enabled:

1. Install the Linux system using the inbox smartpqi driver in secure boot mode.
2. Enroll the Microchip public key for secure boot.

a. Install the ueficert package:

```
rpm -ivh smartpqi-ueficert-#.#.#-###.<sles_version>.x86_64.rpm
```

b. Import public key:

```
mokutil --import /etc/uefi/certs/17A8B2BE.crt
```

c. Reboot.

d. During boot, perform MOK key enrollment to accept the new key.

3. Install Microchip signed driver rpm package:

```
rpm -ivh smartpqi-kmp-default-#.#.#-###.<sles_version>.x86_64.rpm
```

4. Reboot.

6.6 Installing with Oracle Linux

To install the controller SmartPQI driver while installing Oracle Linux, follow the steps in the sections below.

Installing with Oracle Linux 7.6 and Above

Follow these steps to install the driver while installing Oracle Linux 7.6:

1. Install the Linux system using the inbox smartpqi driver.
2. After the installation completes, install the latest smartpqi driver rpm for the kernel you intend to run (where #.#.#-### is the build number and the Oracle Linux version is formatted as follows: ol7u9):

```
Base Kernel: rpm –ivh kmod-smartpqi-#.#.#-###.<ol_version>.x86_64.rpm

UEK Kernel: rpm –ivh kmod-smartpqi-uek-#.#.#-###.<ol_version>.x86_64.rpm
```

6.7 Installing with Ubuntu Linux

To install the controller SmartPQI driver while installing Ubuntu Linux:

Note: The following instructions apply to Ubuntu Server 18.04 LTS and above only.

1. Install the Linux system using the inbox smartpqi driver.
2. Install the smartpqi DKMS package (`smartpqi-dkms_#.#.#-###_all.deb`) by using the following commands (where #.#.#-### is the build number):

   Note: The smartpqi DKMS package rebuilds the smartpqi driver automatically whenever the kernel on the system is updated. This ensures that you have a smartpqi driver to support the new kernel.

```
apt-get update
apt-get –f install build-essential dkms
dpkg -i smartpqi-dkms_#.#.#-###_all.deb
```

6.8 Installing with Debian Linux

To install the controller SmartPQI driver while installing Debian Linux 9.13 and above:

1. Install the Linux system using the inbox smartpqi driver.
2. Reboot the system.
3. Install the smartpqi DKMS package (`smartpqi-dkms_#.#.#-###_all.deb`) by using the following commands (where #.#.#-### is the build number):

Note: The smartpqi DKMS package rebuilds and activates the smartpqi driver automatically any time the kernel on the system is updated. This insures you have a smartpqi driver to support the new kernel.

```
apt-get install build-essential dkms
dpkg -i smartpqi-dkms_#.#.#-###_all.deb
```

6.9 Installing with FreeBSD

To install the controller SmartPQI driver while installing FreeBSD:

1. Copy the driver module (smartpqi.ko) to a USB drive.

   Disk partition the USB key, using gpart on a unix system.

   For example:

   ```
   # gpart create -s GPT da1
   # gpart add -t freebsd-ufs da1
   # newfs /dev/da1p1
   # mount /dev/da1p1 /mnt
   # cp smartpqi.ko /mnt
   ```

2. Insert the USB driver disk.
3. Insert the FreeBSD Installation disk into the CD/DVD drive and boot from it.
4. From the FreeBSD boot menu, press Escape to launch the boot loader prompt.
5. Perform the following steps at the boot loader prompt:

   a. Check all the present modules by executing following command.

      ```
      # lsmod
      ```

      Expected Output: It will show all the present modules.

   b. Unload the kernel module by executing the following command:

      ```
      # unload
      ```

   c. Check whether the kernel is unloaded or not by executing the following command:

      ```
      # lsmod
      ```

      Expected Output: It will show all the present modules.

   d. Check whether the USB drive is detected or not by executing the following command:

      ```
      # lsdev
      ```

      Expected Output:

      part 0: …….. (removable)

      part 1: …….. (removable)

      part 2: …….. (removable)

   e. Load the kernel by executing the following command:

      ```
      # load /boot/kernel/kernel
      ```

   f. Load the driver module by executing the following command:

      ```
      # load part< USB key location >:smartpqi.ko
      ```

      For example: `# load part2:smartpqi.ko`

g. Continue the Installation procedure by typing the following command and pressing **Enter**.

```
# boot
```

h. After completing the kernel installation and before rebooting the system, add the driver to the new system. Choose "YES" when it prompts the following message for the manual configuration.

"The installation is now finished. Before exiting the installer, would you like to open a shell in the new system to make any final manual modifications?

i. Use the following commands to complete the manual configuration:

i. Mount the USB key by using the following command:

```
# mount /dev/da1p1 /media
```

ii. Copy the driver to the boot directory by using the following command:

```
# cp /media/smartpqi.ko /boot/modules/smartpqi.ko
```

iii. Ensure that the boot loader loads by using the following command:

```
# vi /boot/loader.conf
```

iv. Add the following line:

```
smartpqi_load="YES"
# reboot
```

6. If the system halts at `# mountroot>`, check for the boot partition using the following command:

```
# mountroot> ?
```

Note: The boot partition is primarily present in P2, so use the following command:

```
# mountroot> ufs:/dev/<da0p2>
```

6.10 Installing with Solaris

To install the controller SmartPQI driver while installing Solaris, follow the steps in the sections below.

6.10.1 Installing with Solaris Live Media

To install the SmartPQI controller driver with Solaris Live Media:

1. Copy the `smartpqi.pkg` or `iso` file and `adddriver.sh` file to a USB flash drive and insert that drive into the installation system.
2. Boot to the Solaris 11 live media DVD in the installation system. Select the Solaris version and press **Enter**.
3. Select the keyboard (default is 27) and language (default is 3).
4. Enter your login credentials.

   The GUI will appear.
5. Open the terminal and switch to the root user by using the following command:

```
# su
```

   Use "solaris" as the root password.
6. Adaptec controllers are shipped with the inbox aac driver, so it is necessary to remove the driver. Use the following command to remove the inbox aac driver:

```
# rem_drv aac
```

7. Open the "Device driver utility" from the desktop and enter the root password.

8. The DD utility scans and automatically highlights the controller or devices that are not claimed by the driver.
9. Click **Browse** to load the driver image from the USB flash drive.
10. Select `smartpqi.pkg` or `iso` file and click "**OK**".
11. Click **Install**.

    The **Installation Successful** message gets displayed.
12. The DD utility rescans the devices.
13. The available disks are viewable in the terminal by typing the format command. Press **CtrlL+C** to return to the command prompt.
14. Return to the desktop by typing **exit** at the `~#` prompt.
15. Double click the **Install Oracle Solaris** icon for OS installation and follow the steps to complete the OS installation.

Notes: After the OS is installed, perform following procedure:

1. Open the terminal and copy the `adddriver.sh` file to `/tmp` directory.

```
# cp /media/USB_DRIVE/adddriver.sh /tmp/
# cd /tmp
```

2. Execute the `adddriver.sh` script file with the parameter live as follows:

```
# chmod +x adddriver.sh
# ./adddriver.sh live
```

3. Reboot the system using the following command:

```
# reboot
```

6.10.2 Installing with Solaris Text Installer

To install the SmartPQI driver with Solaris Text Installer:

1. Copy the `smartpqi.pkg` or `iso` file and `adddriver.sh` files to a USB flash drive and plug that drive into the installation system.
2. Boot to the Solaris 11.3 or 11.4 text installer DVD in the installation system, and select the keyboard and language.
3. After the DVD boots, select option 3 (**Shell**) from the list.
4. Remove the inbox aac driver and exit the shell using the following commands:

```
#rem_drv aac
#exit
```

5. Select option 2 (**Install Additional Drivers**) from the list. The **Device Driver Utility** screen appears.
6. Press the **F4** key (**Media**) to search for the driver image file on your flash drive.
7. Select **USB drive** and press **Enter**.
8. Find the location of the `smartpqi.pkg` or `iso` file on the flash drive, highlight it, nd press the **F2** key to select it.
9. Press the **F2** key again to install the driver.
10. If the installation succeeds, the following screen will appear:

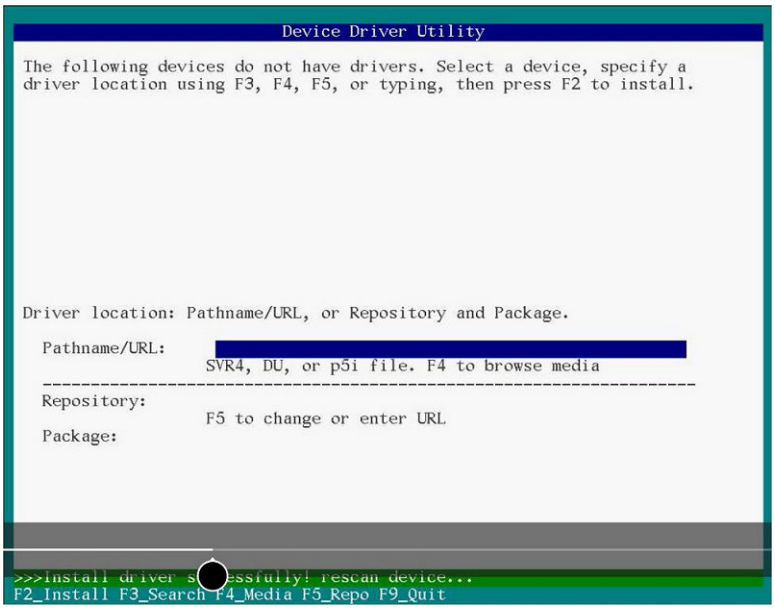

11. Press the **F9** key to exit to the **Options** menu.
12. Select option 3 (**Shell**) from the list.
13. Type the format command in the terminal window to list the available disks. Press **Ctrl+C** to return to the command prompt.
14. Type **exit** at the `~#` prompt to go back to the **Options** menu.
15. Enter option 1 to **Install Oracle Solaris.**

    The **Welcome to Oracle Solaris** screen appears.
16. Press the **F2** key to continue.
17. Select the disk discovery method and press the **F2** key to continue.
18. Follow installation steps accordingly.
19. At the installation summary, press the **F2** key to install the Oracle package; or, press the **F3** key to go back to make changes.
20. After the OS has been installed, press **F9** to go back to the Options menu.
21. Select Option 3 (**Shell**).
22. Open the terminal and copy the `adddriver.sh` file to `/tmp` directory using the following commands:

```
# cp /media/USB_DRIVE/adddriver.sh /tmp/
# cd /tmp
```

23. In the terminal, execute the `adddriver.sh` script file with the parameter text as follows:

```
# chmod +x adddriver.sh
# ./adddriver.sh text
```

24. Reboot the system using the following command:

```
#reboot
```

6.11 Installing with Citrix XenServer

Note: For Hypervisor 8.2 or later, install Hypervisor on the system using the driver included in the release. Then update driver as necessary using the latest driver release from the Citrix support site.

Note: For XenServer 7.6 and above, a USB key is supported for the driver update ISO. On a Linux system, use the dd command to write the SmartPQI driver ISO image to the USB key. You will need the XenServer installation DVD (or equivalent virtual media/iso image) to complete this task. You must have administrator privilege to install the driver image.

To install the controller SmartPQI driver while installing Citrix XenServer:

1. On the machine where you want to install the OS and SmartPQI driver, insert the XenServer installation DVD, then restart your computer.
2. When prompted to add a driver, insert the driver USB key, press `F9`, then select **local media**.

   Note: Leave the driver USB key inserted throughout the installation.
3. Verify the SmartPQI driver and "**use**".
4. Continue the XenServer installation, following the on-screen instructions.
5. Remove the driver USB key, then reboot your computer.

6.12 Installing with VMware

Note: You will need a writable CD or USB flash drive to complete this task. You must have administrator privileges to create the driver disk and install the driver image.

To install the controller SmartPQI driver with VMware ESXi, you must create a custom boot image using the VMware Image Builder tool. This tool automates the process of customizing the ESXi install-ISO and runs as a script under Microsoft PowerShell.

To install the SmartPQI controller driver while installing VMware:

1. Use VMware's ESXi image builder process to build a boot/install image that includes the desired driver. Instructions for this process can be found at docs.vmware.com/en/VMware-vSphere/7.0/com.vmware.esxi.install.doc/GUID-62B15826-B529-4519-B57A-98DFD0CC5522.html?hWord=N4IghgNiBcIJIFswHMCmACAQgVwJYQBNUAnEAXyA.
2. On the VMware ESXi machine, insert the custom boot CD/USB, then restart your computer.
3. Follow the on-screen instructions to begin the VMware installation.
4. Complete the VMware installation, following the on-screen instructions.
5. Remove the custom boot CD or USB drive, then reboot your computer.

7. Installing the Driver on an Existing Operating System

This chapter explains how to install the SmartPQI controller driver on an existing operating system. It assumes that the SmartHBA 2100/SmartRAID 3100 is installed in a computer or server and the OS is already installed.

Notes:

- To install the driver while you're installing an operating system, see Installing the Driver and an Operating System.
- For information about building the SmartPQI drivers from source, see 11. Installing the SmartPQI Drivers from Source .

7.1 Download the Driver Package

Complete these steps to download the drivers for your operating system(s):

1. Open a browser window, then type start.adaptec.com in the address bar.
2. Enter your myMicrochip account credentials.
3. Navigate to the SmartHBA 2100/SmartRAID 3100 product page.
4. Download the controller driver package (zip file archive).
5. When the download completes, extract the package contents to a temporary location on your machine. Each driver is stored in a separate folder (\windows 2016, \rhel7, \rhel6, and so on).

   Note: See the *Release Notes* for a complete list of driver files and folder structure.

7.2 Creating a Driver Disk

Create a driver disk by completing the steps below. You will need a USB flash drive to complete this task.

1. Change to the driver directory for your operating system version.
2. Write the driver binary file to a USB flash drive.
3. Remove and label the driver disk.
4. Continue the installation with the instructions for your operating system.

7.3 Installing on Windows

Note: The following instructions apply to all supported Windows operating systems.

To install the controller SmartPQI driver on Windows:

1. Start or restart Windows.
2. In the Control Panel, launch the Device Manager, right-click your Smart Storage Controller, then select **Update Driver Software**.
3. Insert the driver disk, then select **Browse my computer for driver software**.
4. Browse to the driver disk location, then click **Next**.
5. Select the driver from the list, then click **Next**.
6. When the installation is complete, remove the driver disk and restart your computer.

7.4 Installing on Red Hat

To install the controller SmartPQI driver on Red Hat Linux, follow the steps in the sections below.

Installing on RHEL7 Update 6 and Above

To install the RHEL7 driver on a Linux system:

1. Install the latest smartpqi driver rpm by using the following command (where #.#.#-### is the build number and the RHEL version is formatted as follows: rhel7u9):

```
rpm -ivh kmod-smartpqi-#.#.#-###.<rhel_version>.x86_64.rpm
```

2. Reboot the system.

7.5 Installing on SuSE Linux Enterprise Server

To install the controller SmartPQI driver on SLES, follow the steps below.

Installing on SLES 12 SP3 and Above

Follow these steps to install the driver on SLES 12 SP5:

1. Install the latest smartpqi driver rpm by using the following command (where #.#.#-### is the build number and the SLES version is formatted as follows: sles12sp5):

```
rpm -ivh smartpqi-ueficert-#.#.#-###.<sles_version>.x86_64.rpm
rpm -ivh smartpqi-kmp-default-#.#.#-###.<sles_version>.x86_64.rpm
```

2. Reboot the system.

7.6 Installing on Oracle Linux

To install the controller SmartPQI driver on Oracle Linux, follow the steps below.

Installing on Oracle Linux 7.6 and Above

To install the SmartPQI driver on an Oracle Linux system:

1. Install the latest smartpqi package using the following commands (where #.#.#-### is the build number and the Oracle Linux version is formatted as follows: ol7u9):

```
Base Kernel: rpm -ivh kmod-smartpqi-#.#.#-###.<ol_version>.x86_64.rpm

UEK Kernel: rpm -ivh kmod-smartpqi-uek-#.#.#-###.<ol_version>.x86_64.rpm

UEK6ol7 Kernel: rpm -ivh kmod-smartpqi-uek6ol7-#.#.#-###.x86_64.rpm

UEK6ol8 Kernel: rpm -ivh kmod-smartpqi-uek6ol8-#.#.#-###.x86_64.rpm
```

7.7 Installing on Ubuntu Linux

Notes:

1. For driver installation on Ubuntu Linux, you may need to create the root account and password.
2. The SmartPQI driver is available as inbox for Ubuntu 18.04 and above.

To install the controller SmartPQI driver on Ubuntu:

1. Login to the system using the root user credentials.
2. Update the Ubuntu package index by using the following command:

```
sudo apt-get update
```

3. Load the Ubuntu unpacking tools:

```
sudo apt-get -f install build-essential dkms
```

4. Install the latest SmartPQI DKMS DEB driver package by using the following command (where #.#.#-### is the build number):

```
dpkg -i smartpqi-dkms_#.#.#-###_all.deb
```

7.8 Installing on Debian Linux

To install the controller SmartPQI driver on Debian 9.13 and above:

1. Login to the system as root, or sudo to root.
2. Install the supporting package for the SmartPQI DKMS deb package:

```
apt-get update
apt-get install build-essential dkms
```

3. Install the SmartPQI DKMS DEB driver package using the following command (where #.#.#-### is the build number):

```
dpkg -i smartpqi-dkms_#.#.#-###_all.deb
```

4. Reboot system.

7.9 Installing on FreeBSD

To install the controller SmartPQI driver on FreeBSD:

1. Check whether the driver package is installed or not.

```
# pkg info | grep smartpqi
```

2. Install the SmartPQI package by using the following command:
   For FreeBSD 11:

```
# pkg add smartpqi-amd64.txz
```

   For FreeBSD 12 and 13:

```
# pkg add smartpqi-amd.pkg
```

   Note: Upgrade the package if it already exists, using the following command.
   For FreeBSD 11:

```
# pkg upgrade smartpqi-amd64.txz
```

   For FreeBSD 12 and 13:

```
# pkg upgrade smartpqi-amd.pkg
```

3. Restart the system.

```
# reboot
```

7.10 Installing on Solaris

To install the controller SmartPQI driver on Solaris, follow the steps in the sections below.

1. Remove the inbox aac driver, since the Adaptec Smart Storage Controller is shipped with the inbox aac driver.

```
#rem_drv aac
```

2. Extract the SmartPQI driver package from a .zip or .tar file.
3. Perform the following instructions to load the driver package.
   a. If "smartpqi.pkg" is present, execute the following command:

```
# pkgadd -d smartpqi.pkg
```

   or,

b. Ensure that the MCHPsmartpqi folder is present in the current directory. The dot (.) in following the command will read this folder as a driver package:

```
# pkgadd -d .
```

In the terminal, the following messages will appear:

```
The following packages are available:
 1  MCHPsmartpqi    MICROCHIP Smart PQI RAID Controller driver
                (i386) 1.0.0-100,REV=2016.06.06.22.10

Select package(s) you wish to process (or 'all' to process
all packages). (default: all) [?,??,q]:
```

Enter "**1**" or "**all**".

The following prompt will appear:

```
Do you want to continue with the installation of <MCHPsmartpqi> [y,n,?]
```

Enter "**y**".

The following message appears after a successful installation:

```
Installation of <MCHPsmartpqi> was successful.
```

4. Reboot the system using the following command:

```
# reboot
```

5. Use the following command to confirm whether the driver is loaded or not:

```
# modinfo  -c | grep smartpqi
```

6. Use the following command to identify the driver package information:

```
# pkginfo -l MCHPsmartpqi
```

Removing the Driver Package

1. Remove the loaded driver package using the following command:

```
# pkgrm MCHPsmartpqi
```

In the terminal, the following messages will appear:

```
The following package is currently installed:
   MCHPsmartpqi    MICROCHIP Smart PQI RAID Controller driver
           (i386) 1.0.0-100,REV=2016.06.06.22.10
```

The following prompt will appear:

```
Do you want to remove this package? [y,n,?,q]
```

Enter "**y**". Once the selection is made, the following prompt will appear:

```
Do you want to continue with the removal of this package [y,n,?,q]
```

Enter "**y**". The following message will appear to signify the successful removal of the driver package:

```
Removal of <MCHPsmartpqi> was successful
```

2. Reboot the system using the following command:

```
# reboot
```

7.11 Installing on Citrix XenServer

Note: For Hypervisor 8.2 or later, if Hypervisor was installed on the system using the driver included in the release, then update the driver as necessary using the latest driver release from the Citrix support site.

Note: To copy the driver RPM file to XenServer, you must have access to a remote copy utility, such as WinSCP, putty, or Linux scp. You must have root privilege to install the driver.

To install the controller SmartPQI driver on Citrix XenServer (where #.#.#-### is the build number and the Citrix XenServer version is formatted as follows: xen7.6):

1. Using a remote copy utility, copy the driver RPM file to a local directory on XenServer. This example uses Linux scp to copy the driver to /tmp/smartpqi:

   ```
   scp citrix-smartpqi-#.#.#-###.<xen_version>.rpm root@<xen-server-ip>:/tmp/
   smartpqi
   ```

2. Install the driver module rpm:

   ```
   rpm -ivh /tmp/smartpqi/citrix-smartpqi-#.#.#-###.<xen_version>.rpm
   ```

3. Reboot your computer.

7.12 Installing on VMware

Note: The instructions in this section must be executed on the ESXi server's command line. To access the command line:

1. Enable ESXi system console login. At ESXi system console, press **F2** and log in as root.
2. Select “Troubleshooting Options” and press **ENTER**.
3. Select “Enable ESXi shell”.
4. Select "Enable SSH".
5. Press **ESC** to exit from the menus back to the ESXi splash screen.
6. Press **ALT + F1** to open the ESXi shell login screen.
7. Log in as root.

To install the controller SmartPQI driver on VMware:

1. Using a remote copy utility, such as Linux `scp`, copy the downloaded driver VIB package onto the ESXi server’s tmp directory using the following command (where xxxxxxx is the version/build number):
   For ESXi 6.5:

   ```
   # scp smartpqi-65.xxxx.0.xxx-1OEM.650.0.0xxxxxxx.x86_64.vib
   root@<esxi_server_address>:/tmp
   ```

   For ESXi 6.7:

   ```
   # scp smartpqi-67.xxxx.0.xxx-1OEM.670.0.0xxxxxxx.x86_64.vib
   root@<esxi_server_address>:/tmp
   ```

   For ESXi 7.0:

   ```
   # scp smartpqi-70.xxxx.0.xxx-1OEM.700.0.0xxxxxxx.x86_64.vib
   root@<esxi_server_address>:/tmp
   ```

2. On the ESXi server console, install the driver package (.vib file).
   For ESXi 6.5:

   ```
   # esxcli software vib install -v file:/tmp/
   smartpqi-65.xxxx.0.xxx-1OEM.650.0.0xxxxxxx.x86_64 –maintenance-mode
   ```

For ESXi 6.7:

```
# esxcli software vib install -v file:/tmp/
smartpqi-67.xxxx.0.xxx-1OEM.670.0.0xxxxxxx.x86_64 –maintenance-mode
```

For ESXi 7.0:

```
# esxcli software vib install -v file:/tmp/
smartpqi-70.xxxx.0.xxx-1OEM.700.0.0xxxxxxx.x86_64 –maintenance-mode
```

3. Restart the system.

```
# reboot
```

4. After rebooting the system, check whether the driver package is installed. Compare the driver vib version shown by the command below with the version that was installed, to make sure they are the same.

```
# esxcli software vib list | grep smartpqi
```

5. Restore system console security settings:
   a. At ESXi system console, press **F2** and log in as root.
   b. Select “Troubleshooting Options” and press **ENTER**.
   c. Select “Disable ESXi shell”.
   d. Select "Disable SSH".
   e. Press **ESC** to exit back to the ESXi splash screen.

8. Managing SED

8.1 Overview

8.1.1 Introduction

A Self-Encrypting Drive (SED) encrypts data through disk-based encryption with a Media Encryption Key (MEK). The MEK is known only to the SED and cannot be recovered through forensic analysis. Smart controllers enable the use of SEDs as logical drives or physical drives.

The controller is responsible for managing and delivering the credentials required by the SED for enabling the disk-based encryption. SAS, SATA, and NVME drives that are compliant to the Opal 2.0 and Enterprise 1.01 industry standards are supported.

This section describes the functionality provided by the managed SED features.

This table lists the terms used in this section.

Table 8-1. Terminology

Term	Definition
Credential	A value (password, key, or PIN) that grants access privilege
Encrypted	A value that is obfuscated with an algorithm
PIN	A value (up to 32 bytes) used as a credential on a SED
Key	A value input to a hash function used to create a PIN
Locking range	An LBA range of a SED that may have unique credentials
Identifier	The "name" component of a name—values pair as in Key Identifier: Key
RAID set	A drive or group of drives that contain one or more RAID volumes
Secured	A SED managed by the smart controller. The SED PIN is required to access user data.
Unsecured	A SED that is not managed by the smart controller
Password	This refers to the controller password. The controller password is not related to the SED PIN or the adapter master key
OFS	Original Factory State. This is the state of a newly manufactured SED. No security attributes or locking ranges are configured.
LKM	Local Key Management
RKM	Remote Key Management

8.2 Supported Features

The features described in the following sections are part of the managed SED feature set. Users can configure the managed SED feature settings through the UEFI HII and ARCCONF or maxView OS-based tools.

8.2.1 Supported SED Types

Adapters support attaching SAS, SATA, and NVMe SED (depending on the controller used) that are compliant with the following industry standards:

- TCG Storage Security Subsystem Class: Enterprise Standard version 1.01
- TCG Storage Security Subsystem Class: Opal standard version 2.01

8.2.2 Logical and Physical Drives

Adapters support using SEDs for logical and physical drives with the disk-based encryption feature enabled. Encryption-enabled drives are referred to as secured drives. The controller delivers the credentials to the SEDs and unlocks them. SEDs can also be used for logical and physical drives without the disk-based encryption feature turned on (like a non-SED device) and is referred to as non-secured drives.

Secured SED drives can also be used as boot drives or MaxCache logical drives. Adaptec Controllers also support coexistence of both secured and non-secured drives.

If a secure drive is used as a boot device and the controller password is enabled, the controller password must be entered from the HII utility every time the OS is booted.

Note: Mixing of different SED drive types (Opal and Enterprise) in a logical drive or maxCache array is not supported.

8.2.3 Key Management

The controller is responsible for delivering the credentials (PIN) to the SEDs.

When the controller is managing SEDs, a Master Key is created during the initial setup. The Master Key is required to secure the SEDs and unlock the user data on managed SEDs. The Master Key is stored locally in the controller NVRAM. Optionally, a Master Key Identifier can also be entered at the time of Master Key creation.

8.2.4 Controller Password

The controller password is intended to provide an extra level of security for local SED management and guards against theft of the server, adapter, and the SEDs. The adapter will not unlock any SED until the controller password is provided.

8.2.5 Changing the Master Key

Updating the Master Key is a controller wide operation that applies to all secured SED drives.

8.2.6 Reverting to OFS

Controller management tools can revert a secured SED to the OFS. Secured logical drives must be deleted before returning to OFS, which also destroys all the data on the logical drive.

If the credential of the secured SED is unavailable, reverting to the OFS requires the 32-byte PSID from the drive's label to perform the revert operation.

8.2.7 Importing a Foreign Secured SED Volume

A foreign SED is defined as a secured physical or logical drive that was previously attached to an Adaptec controller with a different credential than what is stored in the new Adaptec controller. The controller can detect that the drive was moved from a different controller and can import the drive to the new controller when the original credentials are entered.

Note: The controller cannot import secured SED volumes from a non-Adaptec controllers. For more information, see the section 8.3.8. Migrating Passive SED RAID Volumes .

8.2.8 Controller Factory Reset

Factory Reset deletes all secrets, keys, passwords, and identifiers on the controller and places the controller's encryption configuration in a factory new state. It does not modify the drives.

8.3 Workflows

8.3.1 Securing a SED

Use the following steps to secure the SED:

1. Connect the supported SED to the controller.

2. Enable SED management from HII, ARCCONF, or maxView. The tools will generate a Master Key with an option to override with a custom Master Key. Optionally, the Master Key Identifier and the controller password can be provided.
3. Establish the controller's ownership of the SED by selecting OFS SEDs to be secured by the controller or create a logical drive with OFS SEDs and enable the security.

Upon subsequent power-on, the user must enter the controller password (if the controller password is enabled) to unlock the SED drives.

8.3.2 Rules to Enable SED Management

These are the rules for enabling SED management:

- SED management is currently not available if Controller Based Encryption (CBE) is already enabled.
- All SEDs in a secure drive must be the same SSC type (Enterprise, Opal, etc.).
- When creating a new secure drive, all SEDs must either be in OFS or owned by the controller.
- Unsecured drives must be in OK state before they can be secured.
- If controller password is enabled, ensure it is entered before performing any drive removal/re-insertion operations while the controller is powered on. Otherwise, the newly added SED will be in the Locked state without the credentials and will not transition to the correct state such as Rebuild or Transformation.
- Once a secure volume is created using the SED management feature, down revving the firmware to a version that does not have support for SED management feature will render the secure volume inaccessible.

8.3.3 Setting Up SED Management with UEFI HII

SED management can be enabled from the controller management tools such as ARCCONF CLI or maxView GUI controller. The following sections describe how to set up SED management with the UEFI HII configuration utility. Refer to the ARCCONF or maxView user guides for details about using those tools.

8.3.3.1 Enabling Controller-Managed SED Encryption

Use the following steps to enable controller-managed SED excryption:

1. Boot to system BIOS setup utility and select the controller to enter HII configuration utility.
2. From the main menu, select **Configure Controller Settings** > **Self-Encryption Drive (SED) Based Encryption Setup**.
3. Select **Key Management Mode** as **Local**, then select **Set/Change Managed SED Settings**.
4. Select **Configure Managed SED**.
5. Enter appropriate input to **Master Key Identifier** and **Master Key** fields.
   Note: Write down the Master Key Identifier and Master Key and keep in a safe location. If it gets lost or forgotten, the only recovery option is to revert SEDs with PSID, which will result in data loss.
   - **Master Key Identifier** is a hint to the master key used for encryption. The master key Identifier must be 0 to 32 characters long for Local Key Management mode, using only ASCII characters. A default identifier is provided which can be updated by entering the input.
   - **Master Key** is used by the key manager for encryption. A valid key must be 8 to 32 characters long with ASCII characters only and contain a combination of alphanumeric characters including, at least one upper-case character, at least one lower-case character, at least one numeric character, and one non-alphanumeric character (such as '#' or '$').
   - Record the Master Key. A method does not exist for recovering or displaying the Master Key once the value is set. Failure to provide the Master Key may result in encrypted data being inaccessible.
6. If setting controller password is required, then provide input in the **Set/Change Controller Password** field and select **Enabled** for the **Controller Password** field.
   - If **Controller Password** is set, all the encrypted devices will be offline at startup. The user must enter the controller password to bring the encrypted devices online. A valid password must be 8 to 32 characters long with ASCII characters only.
7. Select **Submit Changes**

8.3.3.2 Changing the Master Key

Changing the Master Key results in generating a new credential for all the attached SEDs. The user may change the Master Key by supplying the current Master Key, the new Master Key and a new Master Key Identifier. It is strongly

recommended to change the Master Key Identifier when changing the Master Key. If a new Master Key Identifier is not provided, the old identifier is retained.

Use the following steps to change the Master Key:

1. Boot to system BIOS setup utility and select the controller to enter the HII configuration utility.
2. From the main menu, select **Configure Controller Settings** > **Self-Encryption Drive (SED) Based Encryption Setup**.
3. Select **Key Management Mode** as **Local**, then select **Set/Change Managed SED Settings.**
4. Select **Configure Managed SED**.
5. Enter new **Master Key Identifier** and new **Master Key** into fields.
6. Select **Submit Changes.**
7. Enter old Master Key to authenticate the operation.
8. Select **Submit Changes.**

8.3.3.3 Changing Controller Password

Use the following steps to change the controller password:

1. A valid controller password must be 8 to 32 characters long with ASCII characters. Boot to system BIOS setup utility and select controller to enter HII configuration utility.
2. From the main menu, select **Configure Controller Settings** > **Self-Encryption Drive (SED) Based Encryption Setup**.
3. Select **Key Management Mode** as **Local**, then select **Set/Change Managed SED Settings**.
4. Select **Configure Managed SED**.
5. Enter input for **Set/Change Controller Password** and select **Enabled** for **Controller Password** field.
6. Select **Submit Changes.**
7. Enter current Master Key to authenticate the operation.
8. Select **Submit Changes**.

8.3.3.4 Unlocking Controller

When Controller Password is set, data on the encrypted devices will be offline during system boot. The controller password must be entered to unlock the controller and bring the encrypted devices online. After three wrong attempts, a system reboot will be required to attempt to unlock the controller again.

1. Boot to system BIOS setup utility and select the controller to enter theHII configuration utility.
2. From the main menu, select **Configure Controller Settings** > **Self-Encryption Drive (SED) Based Encryption Setup**.
3. Select **Unlock Controller**.
4. Enter controller password, then select **Submit**.

Note: It is recommended to supply the password, before performing any operations such as removing or adding the drives. Without the password, the controller will not be able to unlock the drive to perform the RAID operations such as rebuild, background parity initialization, and surface scan operations.

8.3.4 RAID Logical Drive Operations

The following sections provide the set of operations that are applicable only for the RAID logical drives.

8.3.4.1 Creating Secure RAID Logical Drives

SED management can be enabled on RAID logical drives at the time of creation using SEDs that are in OFS or owned by the controller.

1. Boot to system BIOS setup utility and select controller to enter the HII configuration utility.
2. From the main menu, select **Array Configuration**, then select **Create Array**.
3. Select SED drives which you want to include in the array, then select **Proceed to next Form**.
4. Select **SED Encryption** as **Enabled**.
   - When SED Encryption is enabled, all the logical drives in the array will be encrypted using SED disk-based encryption. The array's physical drive will be owned by the controller. There is no operation to convert back.

5. Select **RAID Level**, then select **Proceed to next Form**.
6. Configure remaining array settings.
7. Select **Submit Changes**.

8.3.4.2 Securing Existing RAID Logical Drives

If a RAID logical drive was created with the SEDs in OFS, they can be converted into a secure logical drive without any loss of user data. Once secured, the SEDs will be accessed using the controller's credentials created while enabling SED management.

This option can also be used to secure RAID logical drives that were managed by third-party tools such as SED Util. Additional precautions are required, see section 8.3.8. Migrating Passive SED RAID Volumes .

Use the following steps to secure existing RAID logical drives:

1. Boot to system BIOS setup utility and select controller to enter HII configuration utility.
2. From the main menu, select **Array Configuration**, then select **Manage Array**.
3. Select the array which has SED members.
4. Select the **Convert to Secure Data** option.
5. Select **Submit Changes**.

8.3.4.3 Assigning Hot Spares to Secure Logical Drives

Generally, SEDs used as spares inherit the current security of the RAID set it is activated for.

Only SEDs of the same SSC type (Enterprise, Opal, etc.) may be added to a secure logical drive. Adding a SED to a managed SED logical drive will automatically secure the SED.

A non-SED or Otherwise Owned SED cannot be added to a secure logical drive. Only secure (Adaptec-owned) or OFS SEDs can be added to secure logical drives.

8.3.4.4 Importing foreign SED

A foreign SED is defined as an Adaptec owned SED with a credential that is different from its connected adapter. This can happen when:

- The SED was migrated from a different adapter. This is the most common case.
- The SED was previously owned by the connected adapter but was removed for a period. During the removed period, the connected adapter Master Key was changed.

The adapter will check for foreign SEDs during discovery or hot plug events and will provide a status that foreign SEDs were found. The user may select configured/unconfigured foreign SEDs and supply the Master Key of the foreign SEDs to import them.

Note: Importing a secure RAID set with an active background operation such as rebuild or transformation may require an additional reboot after import to restart the pending operation.

8.3.4.5 Deleting Secure RAID Logical Drives

When the last logical drive on a secure RAID array is deleted, the adapter will execute a Revert on each SED in the RAID array and return the SEDs to OFS.

Delete volume may be executed on foreign-secure volumes. The RAID metadata and DataStore will be deleted but the locking ranges cannot be deleted without the SED PIN. The SEDs will become unconfigured, Otherwise Owned SEDs and must be reverted with PSID before re-use.

When the adapter is in RAID mode, revert with PSID must be done through Adaptec user tools such as HII, ARCCONF, or maxView.

8.3.4.6 Adding SEDs Through Transformation

SEDs may be added to non-SED or passive SED logical drives. The SED will be checked for the presence of locking ranges and if there are any locking ranges present, the SED will not be allowed to be added to the volume.

Only SEDs of the same SSC type (Enterprise, Opal, etc.) may be added to a secure volume. Adding a SED to a managed SED logical drive will automatically secure the SED.

A non-SED or Otherwise Owned SED cannot be added to a secure logical drive. Only secure (Adaptec-owned) or OFS SEDs can be added to secure logical drives.

8.3.5 HBA Physical Drive Operations

This section details physical drive operations for HBAs.

8.3.5.1 Taking Ownership of SED

Use the following steps to take ownership of the SED:

1. Boot to system BIOS setup utility and select controller to enter HII configuration utility.
2. From the main menu, select **Configure Controller Settings** > **Self-Encryption Drive (SED) Based Encryption Setup**.
3. Select **Take SED Ownership**.
4. Select devices that you want the controller to manage their SED encryption settings.
5. Select **Submit Changes**.

8.3.5.2 Revert

Revert destroys all user data, returns the SED to OFS and deletes any controller related data present in the drives.

The adapter has two versions of the Revert operation available: Microchip Revert and Revert with PSID.

8.3.5.3 Adaptec Revert

Adaptec Revert is performed on secure unconfigured SED owned by the Adaptec controller.

1. Boot to system BIOS setup utility and select controller to enter HII configuration utility.
2. From the main menu, select **Configure Controller Settings** > **Self-Encryption Drive (SED) Based Encryption Setup**.
3. Select **Revert Managed SED to Original Factory State**.
4. Select the devices that you want to revert.
5. Select **Submit Changes**.

8.3.5.4 Revert with PSID

Revert with PSID can return any SED to OFS. It should not be used on the Adaptec controller-managed SEDs unless they are foreign and the SED Key is lost.

1. Boot to system BIOS setup utility and select controller to enter HII configuration utility.
2. From the main menu, select **Disk Utilities**.
3. Select the SED drive to revert using PSID.
4. Select option **Revert to Original Factory State using PSID**.
5. **Enter PSID** of the drive.
6. Select **Submit Changes.**

8.3.5.5 Importing Foreign SED

Use the following steps to import foreign SEDs:

1. Boot to system BIOS setup utility and select controller to enter HII configuration utility.
2. From the main menu, select **Configure Controller Settings** > **Self-Encryption Drive (SED) Based Encryption Setup**.
3. Select **Import Foreign SED**.
4. Select the devices that you want to import.
5. **Enter Foreign SED Master Key**.
6. Select **Submit Changes**.

8.3.6 Disabling SED Management

Disabling SED management results in the loss of data. Prior to disabling the SED management, all the secure drives must be deleted. Once disabled, all secure physical drives are reverted to OFS. Any secure foreign physical drives will transition to Otherwise Owned state.

1. Boot to system BIOS setup utility and select controller to enter HII configuration utility.
2. From the main menu, select **Configure Controller Settings** > **Self-Encryption Drive (SED) Based Encryption Setup**.

3. Select **Key Management Mode** as **Disabled**, then select **Set/Change Managed SED Settings.**
4. Select **Submit Changes**.

8.3.7 Factory Reset

Factory Reset will delete all the SED management–related information (Master Key, Controller Password, etc.) from the controller and restore the controller to the factory state. SED management must be disabled as described in Section 8.3.6. Disabling SED Management prior to resetting the controller to factory settings.

8.3.8 Migrating Passive SED RAID Volumes

Logical volumes created on SEDs that are in OFS are deemed as passive SED RAID logical drives.

The requirements for migration are as follows:

- All SEDs in the RAID set must be in OFS or the adapter cannot take ownership
- All SEDs in the RAID set must be free from other locking ranges
- All SEDs in the RAID set must be the same SSC (Enterprise, Opal, etc.)

Controller supports converting a passive RAID logical drive to a controller managed RAID logical drive. This feature allows to secure the RAID logical drive-by allowing the adapter to assume ownership of the SEDs.

Migrating a SED logical drive managed by third-party tool to a controller-managed logical drive uses the commands as the one described under 8.3.4.2. Securing Existing RAID Logical Drives.

When initiating SED Management, the adapter will take ownership of the SEDs in the RAID set using the credentials stored in the adapter.

8.3.8.1 Caution

Controller secures one drive at a time, and this process should not be interrupted (such as removing drives or server reboot or power loss).

If the adapter fails or loses power before the operation is complete, some of the SED disappears from the RAID set. This may cause the logical drive(s) to become degraded if redundant or fail if non-redundant. The adapter may enter AVS on the next boot.

Forcing the logical drive back online feature can be used to recover a failed logical drive. A rebuild may be required.

8.4 Troubleshooting

8.4.1 Enabling SED Local Key Management Failure

Enabling SED local key management fails when the controller password is entered. Current release of the firmware does not support controller password and hence the enablement fails when the controller password is set.

- Suggested usage: Enable the SED LKM without setting the optional controller password.

8.4.2 Lost Controller Password

When the Controller Password feature is enabled and the password is forgotten, the Controller Password feature can be disabled by changing the SED management configuration. Configuration changes require the user to enter the Master Key, which was generated at the time of SED enablement (see 8.3.3.1. Enabling Controller-Managed SED Encryption for details).

8.4.3 Moving SEDs to a Different Controller While Key Change Is in Progress

Moving a SED to another server or adapter while a key change is in progress should only occur if there is a server or controller failure. If the server or controller is still running, then wait until the key change is completed before the move occurs.

The controller can detect that the moved SEDs are foreign, and it was undergoing a key change.

This is a case of a Foreign Import (section 8.3.4.4. Importing foreign SED) and an interrupted key change scenario. The general handling is to follow the Foreign Import process; however, in this case, the user must provide both the old and new Master Keys.

The management tools support retrieving both the Key Identifier and the Reset Key Identifier from the foreign SED. After both the old and new foreign keys are provided, the controller completes the key change that was in progress prior to the move and then execute the additional key change to import the foreign SEDs.

8.4.4 Moving SEDs to a New Controller when the Server Is Powered Off with Controller Password Enabled

The following use cases describe the process for moving SEDs to a new controller when the server is powered off with the controller password enabled.

Case 1: If the moved SEDs are MCHP-owned, but do not have any logical volumes on it, the SEDs will be discovered as foreign SEDs and will be in the Data Locked state. Once adapter password is provided, the foreign SEDs will be in locked state. The SEDs are not visible to the host. After the user imports the foreign SEDs, they will be unlocked, Microchip-owned. Now they are exposed to the host.

Case 2: If the moved SEDs are MCHP-owned, and have secured logical volumes on it, the volume will be in data locked before adapter password is provided. Once adapter password is given, the secured logical volumes become locked. After user imports all the foreign SEDs, the secured volumes will be in OK state.

8.4.5 Rebuild Does Not Start when a Replacement Drive Is Added Prior to Entering the Controller Password

After providing the adapter password, hot remove the replacement drive and hot plug back in again, rebuild will be started.

9. Solving Problems

This section provides basic troubleshooting information and solutions for solving problems with your SmartHBA 2100/SmartRAID 3100 Series Host Bus Adapter.

9.1 Troubleshooting Checklist

If you encounter difficulties installing or using your SmartHBA 2100/SmartRAID 3100 Series Host Bus Adapter, check these items first:

- With your computer powered off, check the connections to each disk drive, power supply, enclosure, and so on.
- Try disconnecting and reconnecting disk drives from the adapter.
- Check that your adapter is installed in a compatible PCIe expansion slot. To verify the bus compatibility of your adapter, see .
- Ensure that your adapter is firmly seated and secured in the PCIe expansion slot.
- If your adapter is not detected during system boot, try installing it in a different compatible expansion slot. (See Installing the Host Bus Adapter for instructions.)
- Did the driver install correctly? It may need to be reloaded after a reboot or kernel update.
- Check the Release Notes for compatibility issues and known problems.

If you are still unable to resolve a problem, contact Microchip Support.

9.2 Resetting the Adapter

You may need to reset your SmartHBA 2100/SmartRAID 3100 if it becomes inoperable or if a firmware upgrade is unsuccessful. SmartHBA 2100/SmartRAID 3100 adapters support a reset protocol called Side Band Recovery. For information about Side Band Recovery, contact your support representative. To locate the Side Band Recovery jumper on your adapter, see the board illustrations in .

10. Using the Microchip Configuration Utility

10.1 Running the Microchip SAS/SATA Configuration Utility: Ctrl-A or UEFI/HII?

Your Adaptec SmartHBA 2100/SmartRAID 3100 supports two interfaces to the BIOS-level controller configuration options described in this section: Ctrl-A and UEFI/HII.

On servers that support the Unified Extensible Firmware Interface, or UEFI (version 2.10 or higher), the BIOS-level configuration options are presented with a UEFI/HII interface (Human Interaction Infrastructure), rather than Microchip's legacy Ctrl-A interface. UEFI/HII provides an architecture-independent mechanism for initializing add-in cards, like the SmartHBA 2100/SmartRAID 3100, and rendering contents to the screen in a uniform way.

To access the SmartHBA 2100/SmartRAID 3100 configuration options with the Ctrl-A interface, start or restart your computer. When prompted, press `Ctrl+A`, then select your controller from the list. The Ctrl-A main menu is displayed.

In the UEFI/HII interface, the server's standard BIOS provides access to the SmartHBA 2100/SmartRAID 3100 configuration options. How you access the BIOS varies, depending on the server manufacturer, but typically it's started by simply pressing `DEL`. Once you enter setup, navigate to the "**Advanced**" menu (below, left), then select your controller from the list. The UEF/HII main menu is displayed (below, right).

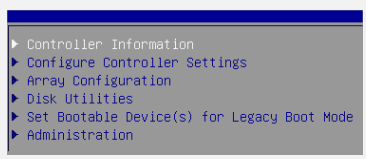

Note: The Administration menu is available only with the UEFI/HII interface.

In both interfaces, all the tools are menu-based and instructions for completing tasks appear on-screen. Menus can be navigated using the arrows, Enter, Esc, and other keys on your keyboard.

This appendix provides instructions for navigating and completing tasks with the UEFI/HII interface. To complete tasks with the Ctrl-A interface:

- Refer to the on-screen instructions for keyboard navigation and selection options.
- Refer to the option descriptions in this section for details about individual configuration settings.

10.2 Controller Information

The Controller Information menu provides details about the controller, including the Board Id, firmware revision number, operating mode, UEFI driver version, encryption support, and World Wide Name. It also provides a configuration summary. To view the SmartHBA 2100/SmartRAID 3100 information, start the Microchip Configuration Utility and select **Controller Information** from the main menu.

10.3 Creating an Array

Use the Array Configuration option to create new arrays. You can select drives, specify the RAID level and encryption options (if supported by your controller), and configure array settings, including stripe size and logical drive size.

To create an array:

1. Start the Microchip SAS/SATA Configuration Utility in UEFI mode.
2. Select your controller, then press `Enter`.
3. From the main menu, select **Array Configuration**, then select **Create Array.**
4. Select each drive you want to include in the array: use the arrow keys to select a drive, press `Enter`, then `Proceed`.

Note: Be sure not to mix drive types! Select SATA drives or SAS drives only.

5. Select **Proceed to next Form**, then press `Enter`.
6. (*For controllers with maxCrypto Controller-Based Encryption only*) Select encryption options for the array: encrypted volume or plaintext volume (not encrypted).

   Note: You will be prompted for your account credentials (Admin or User) if you are not logged into the Encryption Manager; see 10.11.1. Encryption Manager Full Setup.
7. Select the RAID level.
8. Select **Proceed to next Form**.
9. Configure array settings: select the stripe size (from 16KiB to 1024KiB, depending on the number of disks and RAID level), logical drive size (default=all available space), the unit of measure (GiB, TiB, MiB), SSD Over Provisioning Optimization (enable or disable over provisioning on solid state drives in the array, if applicable), and caching (utilizing the controller's cache memory).
10. Select **Submit Changes**.

10.4 Creating a maxCache Array

Note: This option is available only in the UEFI/HII interface.

Use this option to create a maxCache array. The maxCache array supports read and redundant write caching, using a reserved logical device comprised of SSDs only. You can select drives, specify the RAID level, and configure array settings, such as the logical drive size and cache Write policy.

Note: When using maxCache in conjunction with an encrypted primary logical drive, the maxCache volume will also be encrypted automatically.

To create a maxCache array:

1. From the main menu, select **Array Configuration**, then select **Create maxCache Array.**
2. Select each drive you want to include in the array: use the arrow keys to select a drive, press `Enter`, then select **Proceed to next Form**.
3. Select the RAID level, then select **Proceed to next Form**.
4. Configure array settings: select the Cache Line size (64KiB or 256KiB), logical drive size (default=all available space), unit of measure (GiB, TiB, MiB), and cache Write Policy (write-back, write-through).
5. Select **Submit Changes**.
6. Select the data logical drive associated with the maxCache device (16 GB minimum).

10.5 Managing Arrays and Logical Drives

Use the Array Configuration option to manage arrays and logical drives. You can view logical drive properties, create and delete logical drives and spares, and delete logical drives and arrays.

10.5.1 Viewing Logical Drive Properties

To view logical drive properties:

1. From the main menu, select **Array Configuration**, then select **Manage Arrays**
2. Use the arrow keys the select an array, press `Enter`, then select **List Logical Drives.**
3. Use the arrow keys to select a logical drive, press `Enter`, then select **Logical Drive Details**.

10.5.2 Creating Logical Drives

Use the Create Logical Drive option to create new logical drives. This option creates a logical drive from the free space on the selected array.

To create a logical drive:

1. From the main menu, select **Array Configuration**, then select **Create Logical Drive.**
2. Select each drive you want to include in the array: use the space bar to the select a drive, then press `Enter`.

   Note: Be sure not to mix drive types! Select SATA drives or SAS drives only.

3. Select **Proceed to next Form**, then press `Enter`.
4. Select the RAID level, then select **Proceed to next Form**.
5. Configure array settings: select the stripe size (from 16KiB to 1024KiB, depending on the number of disks and RAID level), logical drive size (default=all available space), the unit of measure (GiB, TiB, MiB), SSD Over Provisioning Optimization (enable or disable over provisioning on solid state drives in the array, if applicable), and caching (utilizing the controller's cache memory).
6. Select **Submit Changes**.

10.5.3 Enabling IO Bypass

Use this option to enable IO Bypass acceleration for logical drives comprised of SSDs only.

To adjust the IO Bypass settings:

1. From the main menu, select **Array Configuration**, then select **Manage Arrays.**
2. Use the arrow keys to the select an array, press `Enter`, then select **IO Bypass Settings.**
3. From the pop-up menu, select **Enabled** or **Disabled**, then press `Enter`.
4. Select **Submit Changes**.

10.5.4 Editing Logical Drive Properties

Use this option to edit logical drive properties, including acceleration method and logical drive label.

To edit logical drive properties:

1. From the main menu, select **Array Configuration**, then select **Manage Arrays.**
2. Use the arrow keys to select an array, press `Enter`, then select **List Logical Drives.**
3. Use the arrow keys to select a logical drive, press `Enter`, then select **Edit Logical Drive**.
4. Select **Acceleration Method**, then select one of these options from the pop-up menu:
   - IO Bypass (for logical drives comprised of SSDs)
   - Controller Cache
   - None (to disable acceleration)
5. Select **Logical Drive Label**, then type the new label.
6. Select **Submit Changes**.

10.5.5 Deleting a Logical Drive

Note: Use this procedure to delete an individual logical drive. To delete all logical drives on an array, see 10.5.9. Deleting an Array.

To delete a logical drive:

1. From the main menu, select **Array Configuration**, then select **Manage Arrays.**
2. Use the arrow keys the select an array, press `Enter`, then select **List Logical Drives.**
3. Use the arrow keys to select a logical drive, press `Enter`, then select **Delete LD**.

   Note: Be sure to delete logical drives from the bottom of the list and move up. If you delete a logical drive from the middle of the list, the remaining logical drives move to the Transformation state. During that time, you cannot delete any other logical drives until they all move to the Optimal state.

10.5.6 Assigning Spares

A spare is a disk drive that automatically replaces a failed drive in a logical drive. A spare drive must meet the following criteria:

- It must be an unassigned drive or a spare for another array.
- It must be the same type as existing drives in the array (for example, SATA or SAS).
- The drive capacity must be greater than or equal to the smallest drive in the array.

To assign a spare to an array:

1. From the main menu, select **Array Configuration**, then select **Manage Arrays.**

2. Use the arrow keys the select an array, press `Enter`, then select **Manage Spare Drives.**
3. Select the spare activation type:
   - **Assign Dedicated Spare**: activate spare when drive fails
   - **Assign Auto Replace Spare**: activate spare when drive reports a predictive failure (SMART) status
   - **Change Spare type to Dedicated**: change assigned spare type from AutoReplace to Dedicated
   - **Change Spare type to AutoReplace**: change assigned spare type from Dedicated to AutoReplace
4. Use the arrow keys to select the drive to assign as a spare.

   Note: Only drives that meet the above criteria are displayed.

10.5.7 Deleting a Spare Drive

To delete a spare drive:

1. From the main menu, select **Array Configuration**, then select **Manage Array LD.**
2. Use the arrow keys the select an array, then press `Enter`.
3. Select **Manage Spare**, then select **Delete**.
4. If the array has more than one assigned spare, use the arrow keys to select a spare from the list, then press `Enter`.

10.5.8 Identifying the Drives in an Array

Use this option to identify and locate the physical drives in an array by turning on their Identification LED.

To identify the physical drives in an array:

1. From the main menu, select **Array Configuration**, then select **Manage Arrays.**
2. Use the arrow keys to select an array, then press `Enter`.
3. Select **Identify Device**.
4. Enter a value into **Identification Duration (seconds).** This value determines how long the LED on the device will remain on.
5. Select **Identify by Drive Configuration type**, then select one of these options from the pop-up menu:
   - Data Drive(s) only
   - Spare Drive(s) only
   - All Physical Drives (default)
6. Select **Start**, then press `Enter`.
7. To turn off the Identification LED(s), press `Esc` to return to the previous menu, then select **Stop**.

10.5.9 Deleting an Array

Note: Use this procedure to delete all logical drives on an array, and the array itself. To delete an individual logical drive, see 10.5.5. Deleting a Logical Drive.

To delete an array:

1. From the main menu, select **Array Configuration**, then select **Manage Array LD.**
2. Use the arrow keys the select an array, press `Enter`, then select **Delete Array.**

10.6 Modifying SmartHBA 2100/SmartRAID 3100 Settings

To modify the SmartHBA 2100/SmartRAID 3100 settings, start the Microchip SAS/SATA Configuration Utility, select **Configure Controller Settings** from the main menu, then select **Modify Controller Settings** or **Advanced Controller Settings**. You can set the options in the table below.

Option	Description
Modify Controller Settings	
Connector Mode	• HBA: exposes physical drives to the operating system

.....continued

Option	Description
Advanced Controller Settings	
Max Drive Request Queue Depth	Sets the queue depth for the controller. Valid values are Automatic, 2, 4, 8, 16, and 32.

10.7 Clearing the Controller Configuration

Clearing the controller configuration destroys the controller meta-data, including partition information.

⚠ CAUTION When you clear the controller configuration, all data on the attached media (SSD/HDD) will no longer be accessible and cannot be recovered. Be sure you no longer need the data on the controller before proceeding!

To clear the controller configuration:

1. From the main menu, select **Configure Controller Settings**, then select **Clear Configuration**.
2. Select **Delete All Array Configurations** or **Delete Configuration Metadata on All Physical Drives.**
3. Select **Submit Changes**.

10.8 Backup Power Source

Use the Backup Power Source option to check the status of the cache system's backup power supply, if applicable. From the main menu, select **Configure Controller Settings**, then select **Backup Power Source**.

10.9 Managing Power Settings

Use the Manage Power Settings option to configure the controller's power modes. There are three available power modes. You can also enable Survival mode.

- **Maximum Performance** (default): All settings are selected based on maximum performance. Power savings options that affect performance are disabled.
- **Minimum Power**: When settings are selected without regard to system performance, maximum power savings is achieved. This setting should only be used for very specific applications; it is not appropriate for the majority of customers. Most applications will suffer significant performance reduction.
- **Balanced**: You can use this setting to save power with minimal effects on performance. For large queue depths, this setting affects throughput by 10% or less. At lower queue depths or infrequent I/O, impacts on performance may be greater. This command is typically useful in environments using only hard drives, and is not recommended when using SSDs. Settings are based on the user configuration, such as the number or types of drives, the RAID level, storage topology, and so forth. Significant changes to the configuration may require a reboot for optimal setting selection. If a reboot is required to change settings, UEFI HII prompts for a reboot to reflect requested settings.
- **Survival Mode**: Allows the controller to throttle back dynamic power settings to their minimums when the temperature exceeds the threshold. Enabling Survival Mode allows the server to continue running in more situations, but may affect performance.

To change the power settings for a controller:

1. Start the Microchip SAS/SATA Configuration Utility in UEFI mode.
2. Select your controller, then press `Enter`.
3. From the main menu, select **Controller Configuration**.
4. Select **Manage Power Settings**, then select **Power Mode**.
5. Press **Tab** to select the power mode.

6. Select **Survival Mode**, then press `Tab` to select Enabled or Disabled.
7. Select **Submit Changes**.

10.10 Out of Band Messaging Settings

Use this option to configure the Out of Band Messaging Interface to PBSI, MCTP, or Disable.

Note: This option is supported in the UEFI/HII interface only.

To change the Out of Band Messaging settings for a controller:

1. Start the Microchip SAS/SATA Configuration Utility in UEFI mode.
2. Select your controller, then press `Enter`.
3. From the main menu, select **Configure Controller Settings**.
4. Select **Out of Band Messaging Settings**.
5. Select **OOB Interface** and press `Enter`.
6. From the pop-up menu, select **PBSI**, **MCTP**, or **Disable OOB interface**.
7. To configure Out of Band Messaging for PBSI, set these parameters:

PBSI Parameters	Description
SMBus Slave Address	Sets the SMBus (System Management Bus) slave address of the controller to a valid hexadecimal address value.
SMBus Clock Speed	Sets the SMBus clock speed: • Feature Disabled (Default) • SMBus clock speed 100 kHz • SMBus clock speed 400 kHz
SMBus Clock Stretching	Sets the SMBus Clock Stretching mode: • Enable: Enables SMBus clock stretching • Disable: Disables SMBus clock stretching

8. To configure Out of Band Messaging for MCTP, set these parameters:

MCTP Parameters	Description
SMBus Slave Address	Sets the SMBus (System Management Bus) slave address of the controller to a valid hexadecimal address value. (For valid range, refer to the Management Component Transport Protocol (MCTP) SMBus/I2C Transport Binding Specification document.)
SMBus Device Type	Sets the SMBus Device Type: • Default • Fixed • ARP (Address Resolution Protocol)
SMBus Physical Channel	Sets the SMBus Channel mode: • Enable: Enables SMBus channel • Disable: Disables SMBus channel
Use Static EIDs during Initialization	Sets the Static End Point Identifier (EID) mode: • Enable: Enables Static EID • Disable: Disables Static EID
VDM Discovery Notify	Sets the Vendor Defined Message (VDM) discovery notification mode: • Enable: Enables VDM discovery notification

MCTP Parameters	Description
	• Disable: Disables VDM discovery notification

9. Select **Submit Changes**.

10.11 Using the Encryption Manager

Notes:

1. This option is available only in the UEFI/HII interface; UEFI version 2.4A or higher, recommended.
2. This option is available only for controllers that support maxCrypto Controller-Based Encryption.

The Encryption Manager allows you to configure the controller-based encryption options on your Smart Storage controller. The Encryption Manager supports two roles for managing encryption services:

- A Crypto Officer (Admin) role that can perform all encryption operations
- A User role with reduced privileges

Once you configure the Encryption Manager, you can encrypt logical drives, and create storage spaces with mixed encrypted and plaintext volumes. For more information about creating and managing encrypted volumes, see 10.3. Creating an Array.

10.11.1 Encryption Manager Full Setup

Use the Full Setup option to configure the Encryption Manager for initial use. This option allows you to set the master encryption key, configure the Crypto Officer account, and enable other basic encryption settings. It also allows you to accept the Encryption Manager Terms of Use.

To configure the Encryption Manager:

1. Start the Microchip SAS/SATA Configuration Utility in UEFI mode.
2. Select your controller, then press `Enter`.
3. From the main menu, select **Configure Controller Settings**, then select **Encryption Manager**.
4. Select **Manage Encryption Settings**, then select **Full setup**.
5. Using the arrow keys and Enter key, configure basic encryption settings:
   a) In the Encryption Mode field, select one of these options:
      - **Enable and Allow future...** to enable encryption and allow plaintext logical devices to be created in addition to encrypted logical devices.
      - **Enable and Disallow future...** to enable encryption and allow only encrypted logical devices to be created.
      - **Disable** to disable the Encryption Manager. If encryption is disabled, all encrypted logical drives are set to offline and the data becomes inaccessible; newly created logical drives will not be encrypted. (They will be created as plaintext logical drives.)

   b) In the Enter new password field, enter the Crypto Officer password: press `Enter`, type the password in the pop-up window, then press `Enter` to submit.

      The password is a 8-16 character string, comprising all printable ASCII characters. It must include at least one uppercase character, one lowercase character, one numeric, and one special character (#,!,@,...).

   c) In the Master Key field, enter the master encryption key: press `Enter`, type the key in the pop-up window, then press `Enter` to submit.

      The Master Key is a 10-32 character string, comprising all printable ASCII characters.

⚠ CAUTION Be sure to record the master key and store in a safe place. Once set, the Master Key cannot be displayed or recovered, only reset. Failure to provide the Master Key may result in encrypted data being irretrievable.

6. Select **Proceed to Next Form**.
   The Terms of Use form opens.
7. Select **Accept** to accept the Terms and Conditions.
8. Select **Submit Changes**.

10.11.2 Modifying the Encryption Manager Configuration

Use this option to modify the Encryption Manager configuration, including the master encryption key and other basic encryption settings, and the Crypto Officer and User account settings.

Note: This option is available only after you complete the Encryption Manager Full setup; see 10.11.1. Encryption Manager Full Setup.

To modify the Encryption Manager configuration:

1. Start the Microchip SAS/SATA Configuration Utility in UEFI mode.
2. Select your controller, then press `Enter`.
3. From the main menu, select **Configure Controller Settings**, then select **Encryption Manager**.
4. Select **Manage Encryption Settings**, then select **Crypto Officer Settings**.
5. Using the arrow keys and Enter key, modify basic encryption settings, as needed (encryption enable/disable, master encryption key, allow/disallow future plaintext volumes).
6. In the Firmware Update field, select **Unlock** to allow controller firmware upgrades. Select **Lock** to block (prevent) firmware upgrades.
7. Using the arrow keys and Enter key, configure the Crypto Officer and User account settings:
   a) Change the Crypto Officer password, as needed: press `Enter`, type the password in the pop-up window, then press `Enter` to submit.
   b) Enter the Password Recovery Question for a forgotten password: press `Enter`, type the recovery question in the pop-up window, then press `Enter` to submit.

      The recovery question is 16-255 characters, comprising all printable ASCII characters.
   c) In the Password Recovery Answer field, enter the answer to the recovery question.

      The recovery answer is 16-64 characters and is case sensitive, comprising all printable ASCII characters.

      Note: Password recovery is available only for the Crypto Officer account.
   d) In the User Password field, enter the User account password: press `Enter`, type the password in the pop-up window, then press `Enter` to submit.
8. Select **Proceed to Next Form**.
   The Terms of Use form opens.
9. Select **Accept** to accept the Terms and Conditions.
10. Select **Submit Changes**.

10.11.3 Modifying User Account Settings

Use this option to modify User account settings, including the account password and firmware upgrade options.

Note: This option is available only after you complete the Encryption Manager Full setup; see .

To modify the User Account Settings:

1. From the main menu, select **Configure Controller Settings**, then select **Encryption Manager**.
2. Select **Manage Encryption Settings**, then select **User Settings**.
3. Modify the User account password, as needed: press `Enter`; when the pop-up window opens, type the password, then **.**

   The password is a 8-16 character string, comprising all printable ASCII characters. It must include at least one uppercase character, one lowercase character, one numeric, and one special character (#,!,@,...).
4. In the Firmware Update field, select **Unlock** to allow the controller firmware to be upgraded. Select **Lock** to prevent the controller firmware from being upgraded.
5. Select **Proceed to Next Form**.

6. Select **Submit Changes**.

10.11.4 Resetting a Forgotten Password

Use this option to reset the Crypto Officer password by answering the recovery question.

Note: Password recovery is available only for the Crypto Officer account.

To reset a forgotten password:

1. From the main menu, select **Configure Controller Settings**, then select **Encryption Manager**.
2. Select **Manage Encryption Settings**, then select **Forgot Crypto Officer Password**.
3. Enter the answer to the password recovery question;
4. Enter the Crypto Officer's new password: press `Enter`; when the pop-up window opens, type the password, then press `Enter` to submit.
5. Select **Submit Changes**.

10.11.5 Clearing the Encryption Manager Configuration

Clearing the Encryption Manager configuration resets all keys, passwords, and users, including the Crypto Officer account and User account, and places the Encryption Manager in the factory-new state. If encrypted volumes are still configured, this option is only available in the Microchip SAS/SATA Configuration Utility or by running the GUI/CLI tools in offline mode.

Note: Clearing the configuration does not affect the encrypted logical drives in your storage space. However, to continue accessing or managing encrypted volumes, you must reconfigure the basic encryption settings in the Encryption Manager; see 10.11.1. Encryption Manager Full Setup.

To clear the Encryption Manager configuration:

1. Start the Microchip SAS/SATA Configuration Utility in UEFI mode.
2. Select your controller, then press `Enter`.
3. From the main menu, select **Configure Controller Settings**, then select **Encryption Manager**.
4. Select **Clear Configuration**.
5. If your storage space includes encrypted volumes, enter the Encryption Master Key.

   The Master Key is a 10-32 character string, comprising all printable ASCII characters.
6. Select **Submit Changes**.

10.11.6 Re-Keying a Logical Drive

Use this option to re-key a logical drive for added security. The logical drive key is used with the master key to encrypt the device.

To re-key a logical drive:

1. From the main menu, select **Array Configuration**, then select **Manage Arrays**.
2. Select an array, then select **List Logical Drives**.
3. Select an encrypted logical drive, then select **Volume key rekey**.
4. Select your account type: Crypto Officer or User.
5. Select **Submit Changes**.

10.11.7 Converting Plaintext Data to Encrypted Data

Use this option to convert plaintext data to encrypted data. You can choose to preserve or discard the existing data during conversion.

To convert plaintext data:

1. From the main menu, select **Array Configuration**, then select **Manage Arrays**.
2. Select an array, then select **List Logical Drives**.
3. Select a plaintext logical drive, then select **Convert Plaintext Data to Encrypted Data**.
4. Select your account type: Crypto Officer or User.

5. In the Convert Plaintext Data to Encrypted Data field, select discard existing data or preserve existing data during conversion.
6. Select **Submit Changes**.

10.11.8 Erasing an Encrypted Logical Drive

Use this option to securely erase existing data on an encrypted logical drive. Secure erase completely destroys the data on the logical drive; the data is completely and irretrievably eradicated.

To erase an encrypted logical drive:

1. From the main menu, select **Array Configuration**, then select **Manage Arrays**.
2. Select an array, then select **List Logical Drives**.
3. Select an encrypted logical drive, then select **Secure erase**.
4. Select your account type: Crypto Officer or User.
5. Select **Submit Changes**.

10.11.9 Importing a Foreign Master Key

When an encrypted logical drive is moved to another controller, the master key used to encrypt the logical drive is needed to decrypt it. Use the Import Foreign Local Key option to import the master key so that the logical drive data can be accessed and managed on the new controller.

Note: This option is available only if an encrypted logical device with a missing key is detected in the configuration.

To import a foreign master key:

1. From the main menu, select **Configure Controller Settings**, then select **Encryption Manager**.
2. Select **Import Foreign Local Key**.
3. Enter the master key used to encrypt the logical drive.

   The Master Key is a 10-32 character string, comprising all printable ASCII characters.
4. Enter the Crypto Officer password: press `Enter`; when the pop-up window opens, type the password, then press `Enter` to submit.
5. Select **Submit Changes**.

10.12 Configuring the Controller Port Mode

This option sets the operating mode for the ports on the controller. (To set the operating mode for individual ports, see 10.6. Modifying SmartHBA 2100/SmartRAID 3100 Settings.) You can set the port mode to:

- HBA: exposes physical drives to the operating system
- RAID: exposes only RAID volumes to the operating system and reserves all physical drives for array creation
- Mixed: exposes RAID volumes and physical drives to the operating system

Notes:

1. Changing the port mode from Mixed or HBA to RAID mode removes access to physical drives from the operating system.
2. HBA mode is not available if a port is already configured with logical drives.

To configure the port mode for a controller:

1. Start the Microchip SAS/SATA Configuration Utility in UEFI mode.
2. Select your controller, then press `Enter`.
3. From the main menu, select **Configure Controller Settings**, then select **Configure Controller Port Mode**.
4. Select the controller port mode (HBA, RAID, Mixed).
5. Select **Submit Changes**.

10.13 Device Information

The Device Information menu provides details about the device, such as the Model, Serial Number, and Device Type. To view the device information, start the Microchip Configuration Utility, select your controller, then press `Enter`.

From the main menu, select **Disk Utilities**, select the disk drive, then press `Enter`.

10.14 Identifying a Disk Drive

You can use the disk utilities to physically locate and identify a disk drive by turning on its Identification LED.

To identify a disk drive:

1. From the main menu, select **Disk Utilities**.
2. Select the disk drive you want to locate, then press `Enter`.
3. Select **Identify Device**, then enter a value into **Identification Duration (seconds)**. This value determines how long the LED on the device will remain on.
4. Select **Start**, then press `Enter`.
5. To turn off the Identification LED, press `Esc` to return to the previous menu, select **Stop** and press `Enter`.

10.15 Erasing a Disk Drive

You can use the disk utilities to erase existing data on any unassigned disk drive. The erase operation destroys the data by writing random patterns across the drive; it does not just write zeros.

To erase a disk drive:

1. From the main menu, select **Disk Utilities**.
2. Select the disk drive you want to erase, then press `Enter`.
3. Select **Erase Disk,** then select **Continue**.

10.16 Updating Drive Firmware

You can use the disk utilities to flash a hard drive with new firmware.

To update drive firmware:

1. Copy the firmware binary file to a USB flash drive, then connect the USB drive to the machine. Alternatively, copy the firmware binary to a known location on your machine.
2. From the main menu, select **Disk Utilities**, then select **Update Drive Firmware**.
3. Select a disk drive, then enter the firmware update mode:

Option	Description
Mode 5	Download and Activate
Mode 7	Download in Multiple Transfers
Mode E	Download in Multiple Transfers but Do Not Activate
Mode E+F (HBA Mode only)	Download in Multiple Transfers and Activate

4. Enter the Transfer Size, in 512 byte-increments. The default transfer size is 32768 (32K) bytes. The maximum transfer size is 262144 (256K) bytes.

   Note: Transfer Size is not applicable for Mode 5.
5. Select **Proceed.**
6. Select the storage device where the firmware binary file is located (the USB drive, for instance), navigate the folder hierarchy, then select the firmware binary file.

   The firmware is sent to the hard drive.

7. When the update is complete, reboot the server.

10.17 Clearing Configuration Meta-data

You can use the disk utilities to clear the controller configuration meta-data from any drive that is not part of an array.

Note: This option is enabled only if the selected drive contains controller configuration meta-data. A drive may contain configuration meta-data even if it is not part of an array.

To clear the configuration meta-data from a drive:

1. From the main menu, select **Disk Utilities**.
2. Select a disk drive with configuration meta-data, then press `Enter`.
3. Select **Clear Configuration Metadata,** then select **Continue**.

10.18 Setting the Bootable Device(s) for Legacy Boot Mode

Note: This option is applicable only for Legacy Boot Mode.

This option sets the primary and secondary physical boot device(s) for Legacy Boot Mode. The secondary boot device acts as a failover to the primary boot device.

To set the physical boot device(s) for a controller:

1. From the menu, select **Set Bootable Device(s) for Legacy Boot Mode**, then select **Select Bootable Physical Drive**.
2. To set the default bootable device, select a physical drive from the list, then select **Set as Primary Bootable Device**.
3. To set the secondary bootable device, select a physical drive from the list, then select **Set as Secondary Bootable Device**.

Note: To clear previously set boot devices, select **Clear Bootable Device(s)**.

10.19 Updating the SmartHBA 2100/SmartRAID 3100 Firmware

To update the SmartHBA 2100/SmartRAID 3100 firmware:

1. Copy the firmware binary file (.bin) to a USB flash drive, then connect the USB drive to the machine. Alternatively, copy the firmware binary to a known location on your machine.
2. From the main menu, select **Administration**, then select **Flash Controller Firmware**.
3. Select **Continue with flashing Firmware.**
4. Select the storage device where the firmware binary file is located (the USB drive, for instance), navigate the folder hierarchy, then select the firmware binary file.

   The firmware is sent to the controller.
5. When the update is complete, reboot the server.

10.20 Creating a Support Archive

Use this option to save configuration and status information to help Customer Support diagnose a problem with your system. Saved information includes device logs, drive logs, event logs, error logs, controller logs, and statistics.

To create a support archive:

1. From the main menu, select **Administration**, then select **Save Support Archive**.
2. Select the device where the support archive information will be gathered and stored, then press `Enter`.

   The system gathers the logs and statistics for the device and displays the path where the information is saved.
3. Press any key to complete the operation and exit.

10.21 Resetting the Controller to Factory Defaults

⚠ CAUTION Use extreme caution when resetting the controller to factory defaults. This operation clears configured arrays, controller configuration metadata on the drives, license keys, and encryption configuration, causing all existing data and configuration settings to be irretrievably lost.

Use this option to reset the SmartHBA 2100/SmartRAID 3100 to factory default settings.

To reset the controller:

1. From the main menu, select **Administration**.
2. Select **Reset controller settings to factory defaults**.
3. Select **Submit Changes**.

11. Installing the SmartPQI Drivers from Source

This section explains how to build and install the SmartPQI drivers from source code for the supported Linux OSes, including how to install the packages using the installation DVD as the repository.

11.1 Installation Instructions for Supported Linux OSes

This section explains how to install the driver from source for the following Linux OSes:

- RHEL OS images
- SuSE OS images

Use the following command to determine the type of OS installed on a Linux system:

```
# lsb_release -a
```

Note: The following instructions assume you are installing the packages from the RHEL or SuSE repositories; if not, refer to 11.2. Using the Installation DVD as the Repository.

RHEL OS Images

The instructions below apply to the following RHEL OS images:

- Red Hat® Enterprise Linux 7.4, 7.3,7.2, 7.1, 7.0 (64-bit only)
- Red Hat® Enterprise Linux 6.9, 6.8, 6.7, 6.6 (64-bit only)

To install the SmartPQI driver from source for RHEL-based OS images:

1. Build the driver from the source using the following command:`$ sudo su`
   Note: You must have administrator privileges to perform the installation steps.
2. Install the following driver dependency packages and reboot the system if necessary:`#yum install kernel kernel-devel kernel-headers gcc`
3. Extract the driver source code from the `source tar.bz2` file by using the following command:`# tar -jxvf smartpqi-1.1.2-125.tar.bz2`
4. Compile the `smartpqi.ko` file by using the following command:

   ```
   # cd smartpqi-1.1.2
   # make -f Makefile.alt
   ```

   Note: After the compilation you will get a smartpqi.ko driver file, which is the driver module.
5. Use the following command to backup the existing inbox driver:

   ```
   # mv /lib/modules/`uname -r`/kernel/drivers/scsi/smartpqi/smartpqi.ko \
   /lib/modules/`uname -r`/kernel/drivers/scsi/smartpqi/smartpqi.ko.org
   ```
6. Copy the smartpqi.ko driver file to the destination by using the following command:`# cp ./smartpqi.ko /lib/modules/`uname -r`/kernel/drivers/scsi/smartpqi`
7. Use the following command to rebuild initramfs process with the newly installed smartpqi driver:`# dracut -v -f --add-drivers smartpqi`
   Note: RHEL provides dracut command to place the newly installed smartpqi.ko driver modules into the initramfs file to include them in the Linux kernel.
8. Rebuild initramfs with the newly installed smartpqi driver by using the following command:`# dracut -v -f --add-drivers smartpqi`
9. Reboot the system to load the new initramfs, which will contain the newly installed smartpqi.ko driver.

SuSE OS Images

The instructions below apply to the following SuSE OS images:

- SuSE Linux Enterprise Server 12, SuSE Linux Enterprise Server 12 SP1, SP2, SP3 (64-bit only)
- SuSE Linux Enterprise Server 11 SP3, SP4 (64-bit only)

To install the SmartPQI driver from source for SuSE OS images:

1. Build the driver from the source using the following command:`$ sudo su`
   Note: You must have administrator privileges to perform the installation steps.
2. Install the following driver dependency packages and reboot the system if necessary:`# zypper install kernel-devel gcc make`
3. Extract the driver source code from the `source tgz` file by using the following command:`# tar -jxvf smartpqi-1.1.2-125.tar.bz2`
4. Compile the `smartpqi.ko` file by using the following command:

   ```
   # cd smartpqi-1.1.2
   # make -f Makefile.alt
   ```

   Note: After the compilation you will get a smartpqi.ko driver file, which is the driver module.
5. Backup the already existing inbox driver.

   ```
   # mv /lib/modules/`uname -r`/kernel/drivers/scsi/smartpqi/smartpqi.ko \
   /lib/modules/`uname -r`/kernel/drivers/scsi/smartpqi/smartpqi.ko.org
   ```
6. Copy the kernel driver file to the destination by using the following command:`# cp ./smartpqi.ko /lib/modules/`uname -r`/kernel/drivers/scsi/smartpqi`
7. Use the following command to rebuild initramfs process with the newly installed smartpqi driver:`# mkinitrd -v -m smartpqi`
   Note: SLES provides mkinitrd command to place the newly installed smartpqi.ko driver modules into the initramfs file to include them in the Linux kernel.
8. Reboot the system to load the new initramfs, which will contain the newly installed smartpqi.ko driver.

11.2 Using the Installation DVD as the Repository

Follow the instructions in this section to install the packages required to compile the driver modules using the OS installation DVD as the repository. In these procedures, the DVD is used as the package repository.

Installing Packages on a RHEL-based OS

The following steps install the packages required to compile the driver modules from source on a RHEL-based OS.

1. Execute the following command to become a super user to edit and make changes to various system files:

   `$ sudo -i`

   Note: Super user rights are required to edit and make changes in various system files.
2. Get the name of the installation DVD entry in `/dev` directory. The DVD is visible as `/dev/srX`. Use the following command to list all the scsi devices on the system.

   `# lsscsi`
3. Once the DVD name is confirmed, create a location to mount the DVD, for example:

   `# mkdir /media/iso`
4. Mount the DVD to the `/media/iso` directory by using the following command:

   `/dev/srX /media/iso udf,iso9660 noauto,user,ro 0 0`
5. Use the following command to mount the DVD, once the entry is placed in `/etc/fstab`:

   `# mount /dev/srX`
6. Create a `dvd.repo` to use the packages from the mounted DVD location:

   ```
          [dvd]
          name=Red Hat Enterprise Linux Installation
   DVD    baseurl=file:///media/iso  enabled=1
   ```
7. Import the GPG keys for YUM to authenticate the RPM packages in the DVD:

   `# rpm --import /media/iso/RPM-GPG*`

8. Run the following commands to enable the DVD repository:

```
# yum repolist
# yum install
```

Installing Packages on a SuSE-based OS

The following steps install the packages required to compile the driver modules from source on a SuSE-based OS.

1. Execute the following command to become a super user:

   `$ sudo su`

   Note: Super user rights are required to edit and make changes in various system files.
2. Get the name of the installation DVD entry in `/dev` directory. The DVD is visible as `/dev/srX`. Use the following command to list all the scsi devices on the system.

   `# lsscsi`
3. Once the DVD name is confirmed, create a location to save the DVD image, for example:

   `# mkdir /var/iso`
4. Create an ISO image from the installation disk. Once the DVD image is saved, zypper uses the ISO as an installation service and install the packages from it by using the following command:

   `# dd if=/dev/srX of=/var/iso/sles.iso`
5. Once the installation disk is saved as an ISO image, set it as an installation service by using the following command:

   `# zypper sa “iso:/?iso=/var/iso/sles.iso” “SLES xy spz”`

   Where, xy z is the SLES distribution ID eg 10 sp1.
6. Run the following command after adding the ISO image as an installation service:

   `# zypper sl`

12. SmartRAID/SmartHBA Physical and Logical Device Support

Table 12-1. SmartRAID/SmartHBA Physical and Logical Device Support

Item	SmartRAID Adapters	SmartHBA Adapters	Description
Max single/dual devices supported	256	256	# of physical SAS/SATA devices supported. Includes SEP devices, expanders. Results into 238 storage devices supported
Max # of RAID arrays supported	64	64	Maximum number of RAID arrays supported / exposed to host OS
Max # of logical drives/ single cached volumes (single drive R0)	64	64	Maximum number of logical drives (single or RAID) exposed to host / OS
Multi-LUN	Y	Y	Support for LUNs per SCSI ID available (for RBODs, tape libraries)
# of LUNs supported per SCSI ID	256	256	# of SCSI LUNs supported per SCSI ID (other than RAID LUNs)
RAID 0: max. devices per volume, RAID 1: 2 devices per volume or 3 devices with no plus hot spare, RAID 10: max. devices per volume	128 drives per volume max.	128 drives max.	Supported drive count in striping and mirroring RAID arrays and the combination of both (RAID10)
RAID 5: max devices per volume	128	128	Supported drive count in a RAID5
RAID 50, 6, 60 max. devices per volume	128	N/A	Supported drive count in the named RAID arrays
maxCache 4.0 logical caching volumes	32	N/A	Max. 32 logical drives can be accelerated by maxCache. 32 LDs used for acceleration.
# of spare drives supported	4 / 32	4/32	Number per Array / number per adapter

13. Safety Information

To ensure your personal safety and the safety of your equipment:

- Keep your work area and the computer clean and clear of debris.
- Before opening the system cabinet, unplug the power cord.

13.1 Electrostatic Discharge (ESD)

⚠ CAUTION ESD can damage electronic components when they are improperly handled, and can result in total or intermittent failures. Always follow ESD-prevention procedures when removing and replacing components.

To prevent ESD damage:

- Use an ESD wrist or ankle strap and ensure that it makes skin contact. Connect the equipment end of the strap to an unpainted metal surface on the chassis.
- Avoid touching the adapter against your clothing. The wrist strap protects components from ESD on the body only.
- Handle the adapter by its bracket or edges only. Avoid touching the printed circuit board or the connectors.
- Put the adapter down only on an antistatic surface such as the bag supplied in your kit.
- If you are returning the adapter to Microchip Product Support, put it back in its antistatic bag immediately.

If a wrist strap is not available, ground yourself by touching the metal chassis before handling the adapter or any other part of the computer.

14. Technical Specifications

14.1 Environmental Specifications

Note: SmartRAID 3100 Series adapters and SmartHBA 2100 Series adapters require adequate airflow to operate reliably. Forced airflow is **required**. The recommended airflow is **200 LFM** (linear feet per minute), minimum, for all controllers *except*:

- SmartRAID 3154-24i—**250 LFM**, minimum
- SmartRAID 3162-8i [/e]—**150 LFM**, minimum

Ambient temperature with forced airflow	0 °C to 55 ° C
Relative humidity	20% to 80%, non-condensing
Altitude	Up to 3,000 meters

Note: Ambient temperature is measured 1” from the HBA processor.

14.2 DC Power Requirements

Bus Type	Description	Requirements
PCIe	DC Voltage	3.3 V ± 9%, 12 V ± 8%, 3.3 V ± 9% (auxiliary power from PCIe slot)

14.3 Current and Power Requirements

Adapter Model	Typical Power	Typical Current
Adaptec SmartRAID 3101-4i	10.86 W	0.2A @ 3.3 VDC; 0.85A @ 12.0 VDC
Adaptec SmartRAID 3101E-4i	10.86 W	0.2A @ 3.3 VDC; 0.85A @ 12.0 VDC
Adaptec SmartRAID 3151-4i	10.86 W	0.2A @ 3.3 VDC; 0.85A @ 12.0 VDC
Adaptec SmartRAID 3102-8i	10.86 W	0.2A @ 3.3 VDC; 0.85A @ 12.0 VDC
Adaptec SmartRAID 3102E-8i	10.86 W	0.2A @ 3.3 VDC; 0.85A @ 12.0 VDC
Adaptec SmartRAID 3152-8i	10.86 W	0.2A @ 3.3 VDC; 0.85A @ 12.0 VDC
Adaptec SmartRAID 3154-8i	10.86 W	0.2A @ 3.3 VDC; 0.85A @ 12.0 VDC
Adaptec SmartRAID 3154-8e	10.86 W	0.2A @ 3.3 VDC ; 0.85A @ 12.0 VDC
Adaptec SmartRAID 3154-16i	13.00 W	0.65A @ 3.3 VDC; 0.9A @ 12.0 VDC (3.3 V auxiliary current consumption approximately 50 mA)
Adaptec SmartRAID 3154-24i	16.80 W	0.74A @ 3.3 VDC; 1.2A @ 12.0 VDC (3.3 V auxiliary current consumption approximately 50 mA)

.....continued

Adapter Model	Typical Power	Typical Current
Adaptec SmartRAID 3154-8i8e	15.93 W	0.83A @ 3.3 VDC; 1.1 A @ 12.0 VDC (3.3 V auxiliary current consumption approximately 50 mA)
Adaptec SmartRAID 3154-8i16e	17.6 W	0.97A @ 3.3 VDC; 1.2 A @ 12.0 VDC (3.3 V auxiliary current consumption approximately 50 mA)
Adaptec SmartRAID 3162-8i	9.15 W	0.52A @ 3.3 VDC; 0.62 A @ 12.0 VDC
Adaptec SmartRAID 3162-8i /e	11.72 W	0.65 A @ 3.3 VDC; 0.798 A @ 12.0 VDC
Adaptec SmartHBA 2100-4i4e	7.23 W	1.1A @ 3.3 VDC; 0.3A @ 12.0 VDC
Adaptec SmartHBA 2100-8i	8.20 W	0.2A @ 3.3 VDC; 0.63A @ 12.0 VDC
Adaptec SmartHBA 2100-16i	11.93 W	0.78 A @ 3.3 VDC; 0.78 A @ 12.0 VDC (3.3 V auxiliary current consumption approximately 50 mA)
Adaptec SmartHBA 2100-24i	13.80 W	0.92 A @ 3.3 VDC; 0.90 A @ 12.0 VDC (3.3 V auxiliary current consumption approximately 50 mA)
Adaptec SmartHBA 2100-8i8e	11.93 W	0.78 A @ 3.3 VDC; 0.78 A @ 12.0 VDC (3.3 V auxiliary current consumption approximately 50 mA)

15. Revision History

Table 15-1. Revision History

Revision	Date	Description
B	06/2022	Updated for SR 2.7.0. Added Managing SED section.
A	02/2022	Initial release in Microchip template; Assigned Microchip literature number DS-00004439A, which replaces the previous Microsemi literature number ESC-2171547.
Previous Releases 1–10	10/2017 – 07/2021	Previous releases. Contact Microchip for release details.

The Microchip Website

Microchip provides online support via our website at www.microchip.com/. This website is used to make files and information easily available to customers. Some of the content available includes:

- **Product Support** – Data sheets and errata, application notes and sample programs, design resources, user's guides and hardware support documents, latest software releases and archived software
- **General Technical Support** – Frequently Asked Questions (FAQs), technical support requests, online discussion groups, Microchip design partner program member listing
- **Business of Microchip** – Product selector and ordering guides, latest Microchip press releases, listing of seminars and events, listings of Microchip sales offices, distributors and factory representatives

Product Change Notification Service

Microchip's product change notification service helps keep customers current on Microchip products. Subscribers will receive email notification whenever there are changes, updates, revisions or errata related to a specified product family or development tool of interest.

To register, go to www.microchip.com/pcn and follow the registration instructions.

Customer Support

Users of Microchip products can receive assistance through several channels:

- Distributor or Representative
- Local Sales Office
- Embedded Solutions Engineer (ESE)
- Technical Support

Customers should contact their distributor, representative or ESE for support. Local sales offices are also available to help customers. A listing of sales offices and locations is included in this document.

Technical support is available through the website at: www.microchip.com/support

Microchip Devices Code Protection Feature

Note the following details of the code protection feature on Microchip products:

- Microchip products meet the specifications contained in their particular Microchip Data Sheet.
- Microchip believes that its family of products is secure when used in the intended manner, within operating specifications, and under normal conditions.
- Microchip values and aggressively protects its intellectual property rights. Attempts to breach the code protection features of Microchip product is strictly prohibited and may violate the Digital Millennium Copyright Act.
- Neither Microchip nor any other semiconductor manufacturer can guarantee the security of its code. Code protection does not mean that we are guaranteeing the product is "unbreakable". Code protection is constantly evolving. Microchip is committed to continuously improving the code protection features of our products.

Legal Notice

This publication and the information herein may be used only with Microchip products, including to design, test, and integrate Microchip products with your application. Use of this information in any other manner violates these terms. Information regarding device applications is provided only for your convenience and may be superseded by updates. It is your responsibility to ensure that your application meets with your specifications. Contact your local Microchip sales office for additional support or, obtain additional support at www.microchip.com/en-us/support/design-help/client-support-services.

Trademarks

ISBN: 978-1-5224-9765-3

Quality Management System

For information regarding Microchip's Quality Management Systems, please visit www.microchip.com/quality.

Worldwide Sales and Service

AMERICAS	ASIA/PACIFIC	ASIA/PACIFIC	EUROPE
Corporate Office 2355 West Chandler Blvd. Chandler, AZ 85224-6199 Tel: 480-792-7200 Fax: 480-792-7277 Technical Support: www.microchip.com/support Web Address: www.microchip.com **Atlanta** Duluth, GA Tel: 678-957-9614 Fax: 678-957-1455 **Austin, TX** Tel: 512-257-3370 **Boston** Westborough, MA Tel: 774-760-0087 Fax: 774-760-0088 **Chicago** Itasca, IL Tel: 630-285-0071 Fax: 630-285-0075 **Dallas** Addison, TX Tel: 972-818-7423 Fax: 972-818-2924 **Detroit** Novi, MI Tel: 248-848-4000 **Houston, TX** Tel: 281-894-5983 **Indianapolis** Noblesville, IN Tel: 317-773-8323 Fax: 317-773-5453 Tel: 317-536-2380 **Los Angeles** Mission Viejo, CA Tel: 949-462-9523 Fax: 949-462-9608 Tel: 951-273-7800 **Raleigh, NC** Tel: 919-844-7510 **New York, NY** Tel: 631-435-6000 **San Jose, CA** Tel: 408-735-9110 Tel: 408-436-4270 **Canada - Toronto** Tel: 905-695-1980 Fax: 905-695-2078	**Australia - Sydney** Tel: 61-2-9868-6733 **China - Beijing** Tel: 86-10-8569-7000 **China - Chengdu** Tel: 86-28-8665-5511 **China - Chongqing** Tel: 86-23-8980-9588 **China - Dongguan** Tel: 86-769-8702-9880 **China - Guangzhou** Tel: 86-20-8755-8029 **China - Hangzhou** Tel: 86-571-8792-8115 **China - Hong Kong SAR** Tel: 852-2943-5100 **China - Nanjing** Tel: 86-25-8473-2460 **China - Qingdao** Tel: 86-532-8502-7355 **China - Shanghai** Tel: 86-21-3326-8000 **China - Shenyang** Tel: 86-24-2334-2829 **China - Shenzhen** Tel: 86-755-8864-2200 **China - Suzhou** Tel: 86-186-6233-1526 **China - Wuhan** Tel: 86-27-5980-5300 **China - Xian** Tel: 86-29-8833-7252 **China - Xiamen** Tel: 86-592-2388138 **China - Zhuhai** Tel: 86-756-3210040	**India - Bangalore** Tel: 91-80-3090-4444 **India - New Delhi** Tel: 91-11-4160-8631 **India - Pune** Tel: 91-20-4121-0141 **Japan - Osaka** Tel: 81-6-6152-7160 **Japan - Tokyo** Tel: 81-3-6880- 3770 **Korea - Daegu** Tel: 82-53-744-4301 **Korea - Seoul** Tel: 82-2-554-7200 **Malaysia - Kuala Lumpur** Tel: 60-3-7651-7906 **Malaysia - Penang** Tel: 60-4-227-8870 **Philippines - Manila** Tel: 63-2-634-9065 **Singapore** Tel: 65-6334-8870 **Taiwan - Hsin Chu** Tel: 886-3-577-8366 **Taiwan - Kaohsiung** Tel: 886-7-213-7830 **Taiwan - Taipei** Tel: 886-2-2508-8600 **Thailand - Bangkok** Tel: 66-2-694-1351 **Vietnam - Ho Chi Minh** Tel: 84-28-5448-2100	**Austria - Wels** Tel: 43-7242-2244-39 Fax: 43-7242-2244-393 **Denmark - Copenhagen** Tel: 45-4485-5910 Fax: 45-4485-2829 **Finland - Espoo** Tel: 358-9-4520-820 **France - Paris** Tel: 33-1-69-53-63-20 Fax: 33-1-69-30-90-79 **Germany - Garching** Tel: 49-8931-9700 **Germany - Haan** Tel: 49-2129-3766400 **Germany - Heilbronn** Tel: 49-7131-72400 **Germany - Karlsruhe** Tel: 49-721-625370 **Germany - Munich** Tel: 49-89-627-144-0 Fax: 49-89-627-144-44 **Germany - Rosenheim** Tel: 49-8031-354-560 **Israel - Ra'anana** Tel: 972-9-744-7705 **Italy - Milan** Tel: 39-0331-742611 Fax: 39-0331-466781 **Italy - Padova** Tel: 39-049-7625286 **Netherlands - Drunen** Tel: 31-416-690399 Fax: 31-416-690340 **Norway - Trondheim** Tel: 47-72884388 **Poland - Warsaw** Tel: 48-22-3325737 **Romania - Bucharest** Tel: 40-21-407-87-50 **Spain - Madrid** Tel: 34-91-708-08-90 Fax: 34-91-708-08-91 **Sweden - Gothenberg** Tel: 46-31-704-60-40 **Sweden - Stockholm** Tel: 46-8-5090-4654 **UK - Wokingham** Tel: 44-118-921-5800 Fax: 44-118-921-5820