Serial Attached SCSI Host Bus Adapters Installation and User's Guide

CDP-00279-04-A Rev. A

Issue : October 29, 2014

CDP-00279-04-A Rev. A, Issue

Revision History

Issue	Issue Date	Details of Change
1.03	October 29, 2014	Adaptec SAS Host Bus Adapters Series 7H/7He Refresh

Contents

List of Tables

Adaptec by PMC Product Support

If you have questions about installing or using your Adaptec by PMC product, check this document first—you will find answers to most of your questions. If you need further assistance, use the support options listed below. To expedite your service, have your computer in front of you.

> **Note:** The phone numbers below are subject to change. Please visit the Support section of www.adaptec.com for the most up to date contact information.

Technical Support Identification (TSID) Number

- Before contacting Technical Support, you need your product unique TSID number. The TSID number identifies your product and support status.
- The TSID number is included on a white, bar-coded label, like this example:

- It's recommended that you register your product so that you have easy access to your TSID when contacting product support.

Self Help and Support in English

- Visit our Web site at www.adaptec.com.
- Search the Adaptec Support Knowledgebase (ASK) at ask.adaptec.com for articles, troubleshooting tips, and frequently asked questions for your product.
- For support via e-mail, submit your question at ask.adaptec.com.
- To speak with a Technical Support Specialist, call +1 408 934 7274 or +49 89 4366 5544 or +44 845 266 8773.

Technische Informationen und Support in Deutsch

- Besuchen Sie unsere Webseite www.adaptec.com/de-de
- Suchen Sie in der Adaptec Support Knowledgebase (ASK) unter ask-de.adaptec.com nach Artikeln, Tipps zur Fehlerbehebung und häufig gestellten Fragen zu Ihrem Produkt.
- Support per Email erhalten Sie unter ask-de.adaptec.com.
- Für telefonischen Support wählen Sie +49 89 4366 5522.

Техническая поддержка и информация на русском языке

- Посещаете наш сайт www.adaptec.com/ru-ru/.
- База знаний Adaptec (ASK) на сайте ask-ru.adaptec.com ask-ru.adaptec.com – статьи, советы по устранению неисправностей и часто задаваемые вопросы о Вашем продукте.
- Для поддержки по электронной почте отправьте Ваш запрос на сайте ask-ru.adaptec.com
- Чтобы обратиться к специалисту технической поддержки по телефону, звоните на +7 499 918 7200 или +49 89 4366 5555.

日本語での技術情報とサポート

- 弊社のウェブサイト、www.adaptec.com/ja-jp をご覧ください。
- ask.adaptec.co.jp のAdaptec Support Knowledgebase (ASK)で、お使いの製品の情報 トラブルシューティングのヒント、よくある質問を検索してください。
- Eメールでのサポートには ask.adaptec.co.jp から質問を送ってください。

Information Technique et d'assistance en Français

- Visitez notre site Web à l'adresse www.adaptec.com/fr-fr.
- Rechercher dans le base de connaissances Adaptec (ASK) ask-fr.adaptec.com pour des articles, conseils de dépannage et les questions fréquemment posées pour votre produit.

Limited 3-Year Hardware Warranty

1. PMC-Sierra, Inc. (“PMC-Sierra”) warrants to the purchaser of this product that it will be free from defects in material and workmanship for a period of three (3) years from the date of purchase. If the product should become defective within the warranty period, PMC-Sierra, at its option, will repair or replace the product, or refund the purchaser's purchase price for the product, provided it is delivered at the purchaser's expense to an authorized PMC-Sierra service facility or to PMC-Sierra.
2. Repair or replacement parts or products will be furnished on an exchange basis and will either be new or reconditioned and will be subject to original warranty term. All replaced parts or products shall become the property of PMC-Sierra. This warranty shall not apply if the product has been damaged by accident, misuse, abuse or as a result of unauthorized service or parts.
3. Warranty service is available to the purchaser by delivering the product during the warranty period to an authorized PMC-Sierra service facility or to PMC-Sierra and providing proof of purchase price and date. The purchaser shall bear all shipping, packing, and insurance costs and all other costs, excluding labor and parts, necessary to effectuate repair, replacement or refund under this warranty.
4. For more information on how to obtain warranty service, write or telephone:
   - Americas PMC-Sierra, Inc. at 1380 Bordeaux Drive Sunnyvale, CA 94089 USA, +1 408 934-7274
   - EMEA PMC-Sierra, at Lise-Meitner-Strasse 7, 85737 Ismaning, Germany, +49 89 43665544
   - Asia Pacific PMC-Sierra, at PO Box 110, Peakhurst NSW 2210, Australia, +61 2 8212-5531
   - Japan PMC-Sierra, at Queens Tower C-9F, Minato-Mirai, Nishi-ku, Yokohama-city, Kanagawa-Pref, 220-6209, Japan, 045-683-6056
5. THIS LIMITED WARRANTY DOES NOT EXTEND TO ANY PRODUCT WHICH HAS BEEN DAMAGED AS A RESULT OF ACCIDENT, MISUSE, ABUSE, OR AS A RESULT OF UNAUTHORIZED SERVICE OR PARTS.
6. THIS WARRANTY IS IN LIEU OF ALL OTHER EXPRESS WARRANTIES WHICH NOW OR HEREAFTER MIGHT OTHERWISE ARISE RESPECT TO THIS PRODUCT. IMPLIED WARRANTIES, INCLUDING THOSE OF MERCHANTABILITY, FITNESS FOR A PARTICULAR PURPOSE AND NON-INFRINGEMENT SHALL (A) HAVE NO GREATER DURATION THAN 3 YEARS FROM THE DATE OF PURCHASE, (B) TERMINATE AUTOMATICALLY AT THE EXPIRATION OF SUCH PERIOD AND (C) TO THE EXTENT PERMITTED BY LAW BE EXCLUDED. IN THE EVENT THIS PRODUCT BECOMES DEFECTIVE DURING THE WARRANTY PERIOD, THE PURCHASER'S EXCLUSIVE REMEDY SHALL BE REPAIR, REPLACEMENT OR REFUND AS PROVIDED ABOVE. INCIDENTAL OR CONSEQUENTIAL DAMAGES, INCLUDING WITHOUT LIMITATION LOSS OF DATA, ARISING FROM BREACH OF ANY EXPRESS OR IMPLIED WARRANTY ARE NOT THE RESPONSIBILITY OF PMC-SIERRA AND, TO THE EXTENT PERMITTED BY LAW, ARE HEREBY EXCLUDED BOTH FOR PROPERTY DAMAGE, AND TO THE EXTENT NOT UNCONSCIONABLE, FOR PERSONAL INJURY DAMAGE.
7. WITHIN THE US, SOME STATES DO NOT ALLOW THE EXCLUSION OR LIMITATION OF INCIDENTAL OR CONSEQUENTIAL DAMAGES FOR CONSUMER PRODUCTS, AND SOME STATES DO NOT ALLOW LIMITATIONS ON HOW LONG AN IMPLIED WARRANTY LASTS, SO THE ABOVE LIMITATION OR EXCLUSIONS MAY NOT APPLY TO YOU.
8. THIS WARRANTY GIVES YOU SPECIFIC LEGAL RIGHTS, AND YOU MAY ALSO HAVE OTHER RIGHTS WHICH VARY DEPENDING ON WHERE YOU RESIDE.
9. FOR AUSTRALIA RESIDENTS, IF THE PRODUCT SHOULD BECOME DEFECTIVE WITHIN THE WARRANTY PERIOD, PMC-SIERRA, AT ITS OPTION, WILL REPAIR OR REPLACE THE PRODUCT, OR REFUND THE PURCHASER'S PURCHASE FOR THE PRODUCT, PROVIDED IT IS DELIVERED AT THE PURCHASER'S EXPENSE BACK TO THE PLACE OF PURCHASE AFTER PMC-SIERRA TECHNICAL SUPPORT HAS ISSUED AN INCIDENT NUMBER. IN ADDITION TO THE WARRANTIES SET FORTH HEREIN, OUR GOODS COME WITH GUARANTEES THAT CANNOT BE EXCLUDED UNDER THE AUSTRALIAN CONSUMER LAW. YOU ARE ENTITLED TO A REPLACEMENT OR REFUND FOR A MAJOR FAILURE AND FOR COMPENSATION FOR ANY OTHER REASONABLY FORESEEABLE LOSS OR DAMAGE. YOU ARE ALSO ENTITLED TO HAVE THE GOODS REPAIRED OR REPLACED IF THE GOODS FAIL TO BE OF ACCEPTABLE QUALITY AND THE FAILURE DOES NOT AMOUNT TO A MAJOR FAILURE.

Regulatory Compliance Statements

Federal Communications Commission Radio Frequency Interference Statement

Attention: Changes or modifications to this unit not expressly approved by the party responsible for compliance could void the user's authority to operate the equipment.

This equipment has been tested and found to comply with the limits for a Class B digital device, pursuant to Part 15 of the FCC rules. These limits are designed to provide reasonable protection against harmful interference in a residential installation. This equipment generates, uses, and can radiate radio frequency energy, and if not installed and used in accordance with the instruction manual, may cause harmful interference to radio communications. However, there is no guarantee that interference will not occur in a particular installation. However, if this equipment does cause interference to radio or television equipment reception, which can be determined by turning the equipment off and on, the user is encouraged to try to correct the interference by one or more of the following measures:

- Reorient or relocate the receiving antenna.
- Increase the separation between equipment and receiver.
- Connect the equipment to an outlet on a circuit different from that to which the receiver is connected.
- Consult the dealer or an experienced radio/television technician for help.
- Use a shielded and properly grounded I/O cable and power cable to ensure compliance of this unit to the specified limits of the rules.

This device complies with part 15 of the FCC rules. Operation is subject to the following two conditions: (1) this device may not cause harmful interference and (2) this device must accept any interference received, including interference that may cause undesired operation.

UL Compliance Statement

Adaptec by PMC products are tested and listed by Underwriters Laboratories, Inc. to UL 6095 0-1 Second Edition and IEC-60950-1 Second Edition standards, file numbers E175975. Adaptec by PMC products are for use only with UL listed ITE.

PMC-Sierra, Inc.

Use only with the listed ITE:

ASA-70165H/ASA-70165He/ASA-71605H/
ASA-71605He/ASA-7085H/
ASA-7805H/
ASA-6805H/ASA-6405H

Tested to Comply
With FCC Standards

FOR HOME OR OFFICE USE

European Union Compliance Statement

This Information Technology Equipment has been tested and found to comply with EMC Directive 89/336/EEC, as amended by 92/31/EEC and 93/68/EEC, in accordance with:

- EN55022 (1998+A1:2000+A2:2007) Emissions:
  - Class B ITE radiated and conducted emissions
- EN55024 (1998+A1:2001+A2:2010) Immunity:
  - EN61000-4-2 (2009) Electrostatic discharge: ±4 kV contact, ±8 kV air
  - EN61000-4-3 (2010) Radiated immunity: 3V/m
  - EN61000-4-4 (2004) Electrical fast transients/burst: ±1 kV AC, ±0.5 kV I/O
  - EN61000-4-5 (2006) Surges: ±1 kV differential mode, ±2 kV common mode
  - EN61000-4-6 (2009) Conducted immunity: 3 V
  - EN61000-4-11 (2004) Supply dips and variations: 30% and 100%
- EN50581 (2012) Technical Documentation:
  - For the assessment of electrical and electronic products with respect to the restriction of hazardous substances

In addition, all equipment requiring U.L. listing has been found to comply with EMC Directive 73/23/EEC as amended by 93/68/EEC in accordance with EN60950 with amendments A1, A2, A3, A4, A11.

Australian/New Zealand Compliance Statement

This device has been tested and found to comply with the limits for a Class B digital device, pursuant to the Australian/New Zealand standard AS/NZS 3548 set out by the Spectrum Management Agency.

Canadian Compliance Statement

This Class B digital apparatus meets all requirements of the Canadian Interference-Causing Equipment Regulations.
Cet appareil numérique de la classe B respecte toutes les exigences du Règlement sur le matériel brouilleur du Canada.

Japanese Compliance (Voluntary Control Council Initiative)

This equipment complies to class B Information Technology equipment based on VCCI (Voluntary Control Council for Interface). This equipment is designed for home use but it may causes radio frequency interference problem if used too near to a television or radio. Please handle it correctly per this documentation.

Korean Compliance (KCC) Statement

Adaptec by PMC products are tested and certified by KCC:

KCC-REM-KHK-ASA-6xx5
KCC-REM-KHK-ASA-7xxx5

The above certification covers the following series:

ASA-70165H, ASA-70165He, ASA-71605H
ASA-71605He, ASA-7085H
ASA-7805H, ASA-6805H
ASA-6405H

B급 기기
(가정용 방송통신기자재)
Class B Equipment
(For Home Use Broadcasting & Communication Equipment)
이 기기는 가정용(B급) 전자파적합기기로서 주
로 가정에서 사용하는 것을 목적으로 하며, 모
든 지역에서 사용할 수 있습니다.

This equipment is home use (Class B) electromagnetic wave suitability equipment and to be used mainly at home and it can be used in all areas.

1 About This Guide

This Installation and User's Guide explains how to install and configure your Adaptec by PMC® Host Bus Adapter (HBA).

These Adaptec SAS Adapter (ASA) models are described in this guide:

- ASA-70165H, ASA-70165He
- ASA-71605H, ASA-71605He
- ASA-7085H
- ASA-7805H
- ASA-6405H
- ASA-6805H

What You Need to Know Before You Begin

You should be familiar with computer hardware, data storage, and Serial Attached SCSI (SAS) and Serial ATA (SATA) technology.

You should also be familiar with direct-attached storage (DAS) concepts and technology.

> **Note:** Because this guide covers multiple Adaptec HBA products, some of the features and functions described may not be available for your HBA model. For more information, see About Your Host Bus Adapter on page 14.

Terminology Used in this Guide

Many of the terms and concepts referred to in this guide are known to computer users by multiple names. This guide uses these terms:

- Host Bus Adapter or HBA (also known as adapter, board, or I/O card)
- Disk drive (also known as hard disk, hard drive, or hard disk drive)
- Solid State Drive (also known as SSD or non-rotating storage media)
- Enclosure (also known as storage enclosure, disk drive enclosure, or expander)

How to Find More Information

You can find more information about your Adaptec Host Bus Adapter and utilities software by referring to these documents, available for download at the Adaptec Web site at start.adaptec.com:

- *Adaptec Serial Attached SCSI Host Bus Adapters Installation and User's Guide* (this guide)—Describes how to set up and install your Adaptec Host Bus Adapter and use the included management tools and software.
- *Readme.txt*—Includes updated product information and known issues.

2 Kit Contents and System Requirements

This section lists the contents of your Adaptec Host Bus Adapter kit and the system requirements for successfully installing and using your HBA.

Kit Contents

- Adaptec Host Bus Adapter
- (*Adaptec Series 7He only*) Encryption key (pre-installed)
- Low-profile bracket

  Note: The latest firmware, drivers, utilities, and documentation can be downloaded from the Adaptec Web Site at start.adaptec.com. See Creating a Driver Disk on page 27 for information about downloading drivers.

System Requirements

- PC-compatible computer with Intel Pentium, or equivalent, processor
- Motherboard with these features:
  - Support for multi-function devices where one of the devices is a PCI bridge
  - Large memory-mapped address ranges

  Refer to the Readme for additional motherboard compatibility information. (The Readme is available for download at the Adaptec Web site at start.adaptec.com.)
- One of these operating systems:

  Note: Refer to the Readme for up-to-date operating system version support. To download Linux driver sources, visit the Support area of the Adaptec Web site at start.adaptec.com.

  - Microsoft® Windows® Server 2012 R2, Windows Server 2012 (64-bit), Windows Server 2008 R2 (64-bit), Windows SBS 2011, Windows 7, Windows 8, Windows 8.1 (32-bit and 64-bit)
  - Red Hat® Enterprise Linux 6.5, 6.4, 6.3 (32-bit and 64-bit)
  - CentOS 6.5, 6.4, 6.3 (32-bit and 64-bit)
  - SuSE Linux Enterprise Server 11 SP3 (32-bit and 64-bit)
  - Ubuntu Linux 12.04.4, 12.04.3, 12.04.2 (32-bit and 64-bit)
  - Debian Linux 7.4, 7.2, 7 (32-bit and 64-bit)
  - FreeBSD 9.1, 9.0 (32-bit and 64-bit)
  - VMware ESXi 5.5
- 2 GB (or more) of RAM
- Available compatible PCIe slot (depending on your adapter model—see the descriptions in About Your Host Bus Adapter on page 14)
- 120 MB of free disk drive space
- USB flash drive or CD burner, for creating driver disks and bootable media

3 About Your Host Bus Adapter

This section provides an overview of the features of your Adaptec Host Bus Adapter.

Standard Host Bus Adapter Features

- Support for SAS and SATA HDDs, Solid State Drives (SSDs), removable media, and SAS tape drives
- uEFI pre-boot BIOS, Ctrl-A configuration utility
- Flash ROM for updates to firmware and BIOS
- up to 16 ports, 6 Gb/s I/O
- SAS 2.1, PCIe 3.0 (Series 7H/7He), PCIe 2.0 (Series 6H)
- Low-profile MD2 SFF card size
- Support for disk drive enclosures with SES2 enclosure management hardware
- Hot plug support for both direct-attached drives and expanders
- Universal asynchronous receiver/transmitter (UART) debug/diagnostic port

About the Adaptec SAS Adapter 70165H/70165He

The Adaptec SAS Adapter 70165H/70165He is a SAS Host Bus Adapter with these features:

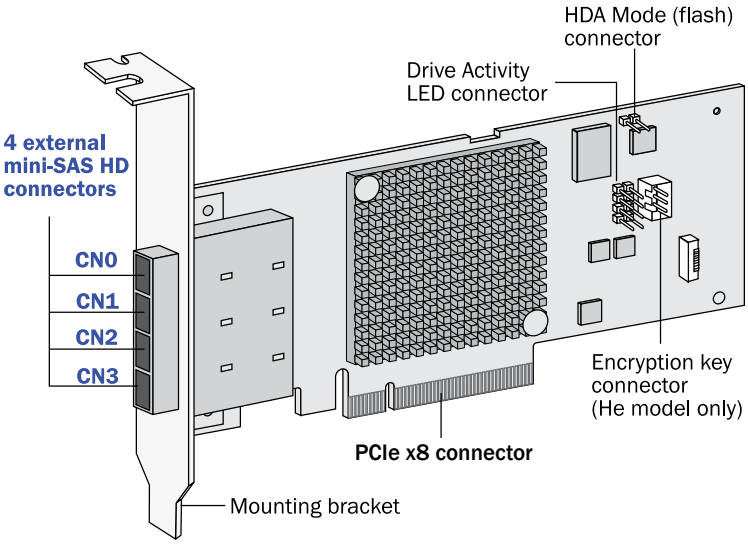

Form Factor	Low-profile MD2 SFF card size
Bus compatibility	PCIe 3.0
PCIe bus width	x8
Data transfer rate	6 Gb/s per port
Phys (Unified Serial Ports)	16
Connectors, external	4 mini-SAS HD x4 (SFF-8644)
Maximum number of disk drives	16 direct-attached (or up to 256 with expanders)
Enclosure Support	SES2
Thermal Sensor	Processor temperature
Encryption	**70165H**: No **70165He:** Yes, with Encryption Key

About the Adaptec SAS Adapter 71605H/71605He

The Adaptec SAS Adapter 71605H/71605He is a SAS Host Bus Adapter with these features:

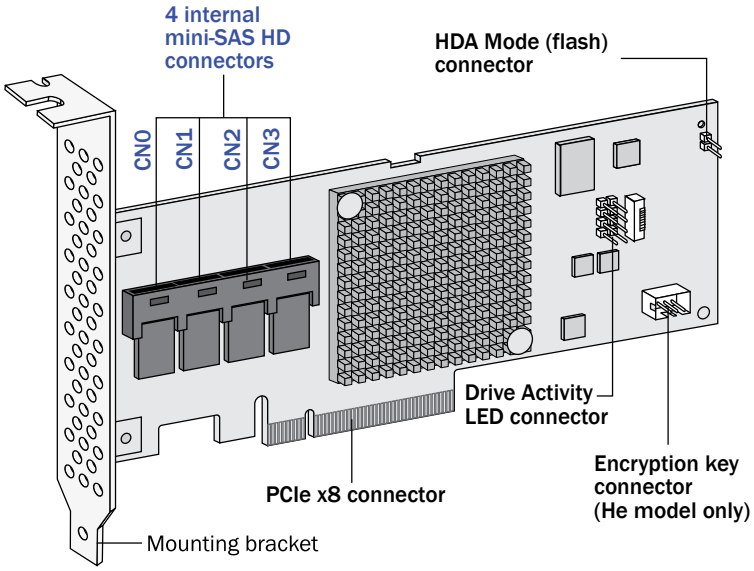

Form Factor	Low-profile MD2 SFF card size
Bus compatibility	PCIe 3.0
PCIe bus width	x8
Data transfer rate	6 Gb/s per port
Phys (Unified Serial Ports)	16
Connectors, internal	4 mini-SAS HD x4 (SFF-8643)
Maximum number of disk drives	16 direct-attached (or up to 256 with expanders)
Enclosure Support	SES2 and SGPIO (Serial General Purpose Input/Output)
Thermal Sensor	Processor temperature
Encryption	**71605H**: No **71605He:** Yes, with Encryption Key

About the Adaptec SAS Adapter 7085H

The Adaptec SAS Adapter 7085H is a SAS Host Bus Adapter with these features:

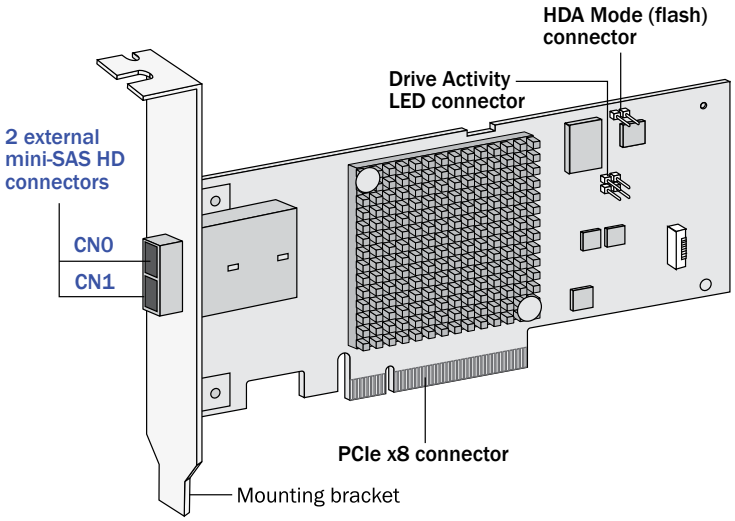

Form Factor	Low-profile MD2 SFF card size
Bus compatibility	PCIe 3.0
PCIe bus width	x8
Data transfer rate	6 Gb/s per port
Phys (Unified Serial Ports)	8
Connectors, external	2 mini-SAS HD x4 (SFF-8644)
Maximum number of disk drives	8 direct-attached (or up to 256 with expanders)
Enclosure Support	SES2
Thermal Sensor	Processor temperature
Encryption	No

About the Adaptec SAS Adapter 7805H

The Adaptec SAS Adapter 7805H is a SAS Host Bus Adapter with these features:

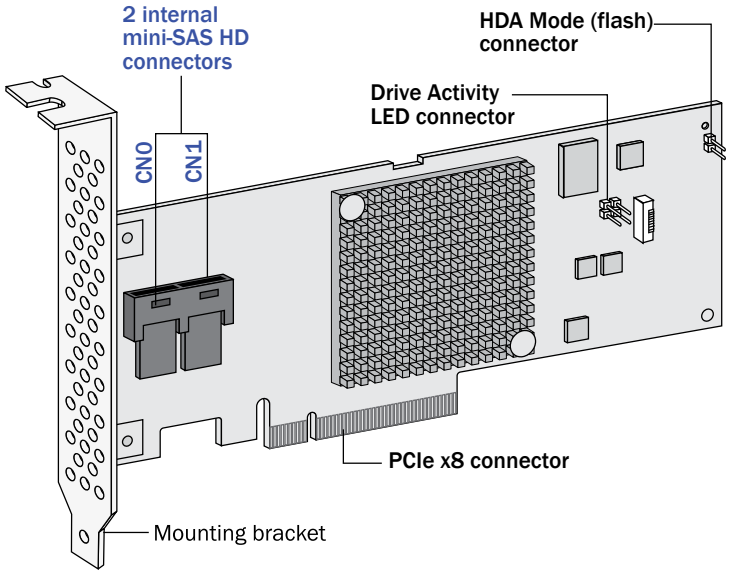

Form Factor	Low-profile MD2 SFF card size
Bus compatibility	PCIe 3.0
PCIe bus width	x8
Data transfer rate	6 Gb/s per port
Phys (Unified Serial Ports)	8
Connectors, internal	2 mini-SAS HD x4 (SFF-8643)
Maximum number of disk drives	8 direct-attached (or up to 256 with expanders)
Enclosure Support	SES2 and SGPIO (Serial General Purpose Input/Output)
Thermal Sensor	Processor temperature
Encryption	No

About the Adaptec SAS Adapter 6405H

The Adaptec SAS Adapter 6405H is a SAS Host Bus Adapter with these features:

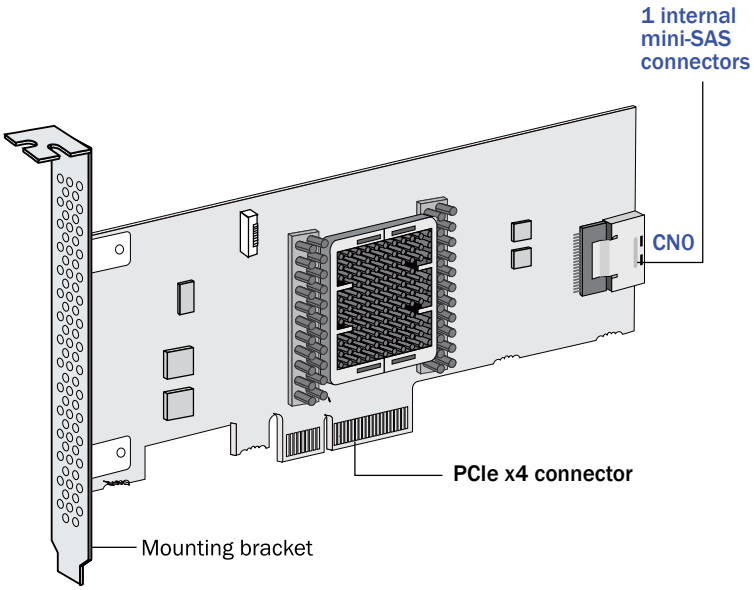

Form Factor	Low-profile MD2 SFF card size
Bus compatibility	PCIe 2.0
PCIe bus width	x4
Data transfer rate	6 Gb/s per port
Phys (Unified Serial Ports)	4
Connectors, internal	1 mini-SAS x4 (SFF-8087)
Maximum number of disk drives	4 direct-attached (or up to 256 with expanders)
Enclosure Support	SES2 and SGPIO (Serial General Purpose Input/Output)
Thermal Sensor	No
Encryption	No

About the Adaptec SAS Adapter 6805H

The Adaptec SAS Adapter 6805H is a SAS Host Bus Adapter with these features:

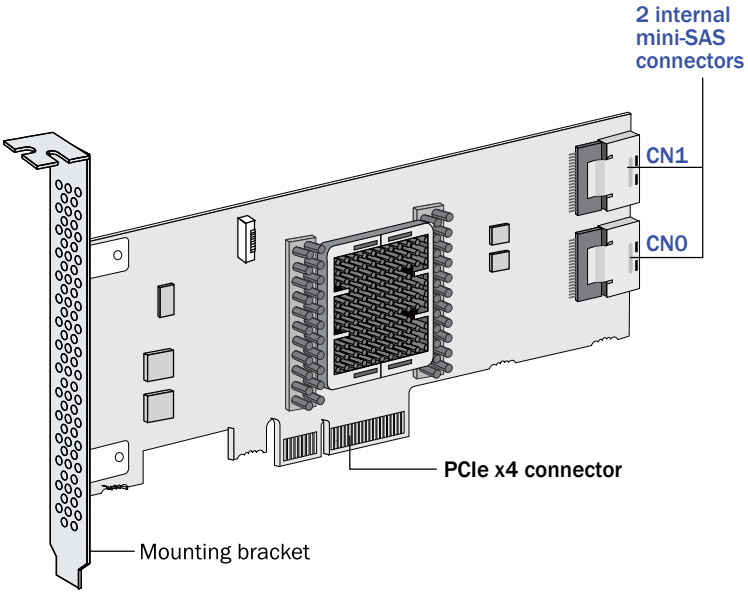

Form Factor	Low-profile MD2 SFF card size
Bus compatibility	PCIe 2.0
PCIe bus width	x4
Data transfer rate	6 Gb/s per port
Phys (Unified Serial Ports)	8
Connectors, internal	2 mini-SAS x4 (SFF-8087)
Maximum number of disk drives	8 direct-attached (or up to 256 with expanders)
Enclosure Support	SES2 and SGPIO (Serial General Purpose Input/Output)
Thermal Sensor	No
Encryption	No

4 Installing the Adapter and Disk Drives

This section explains how to install your Adaptec Host Bus Adapter and connect it to internal and external disk drives.

Before You Begin

- Read Safety Information on page 52.
- Familiarize yourself with your HBA's physical features (see Standard Host Bus Adapter Features on page 14).
- If you are installing the HBA into a low-profile computer cabinet, replace the original full-height bracket with the low-profile bracket included in the kit (see Replacing the Full-Height Bracket with a Low-Profile Bracket on page 21).
- If your HBA supports encryption, verify that the encryption key is installed on the adapter card and seated securely (see Checking the Encryption Key on page 23).
- Ensure that you have the right number of drives and cables for your application (see Selecting Disk Drives and Cables on page 23).

Replacing the Full-Height Bracket with a Low-Profile Bracket

If you are installing your Adaptec HBA into a low-profile computer cabinet, replace the original full-height bracket with the low-profile bracket included in your distribution kit. The full-height bracket is mounted on the front of the adapter board, the low-profile bracket is mounted on the back, as shown in the figures below.

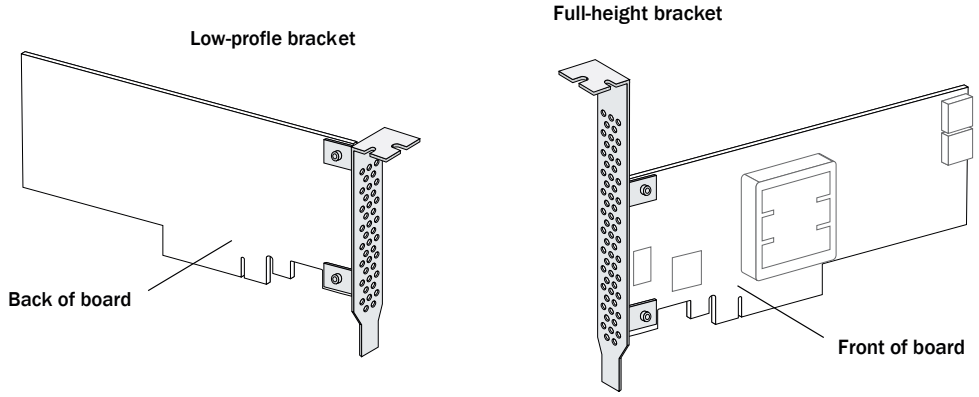

To replace the full-height bracket with the low-profile bracket:

1. Remove the full-height bracket from the adapter board. The full-height bracket is installed on the front side of the adapter, with the mounting screws inserted from the back (see Figure 1). Using a Phillips head screw driver, remove the mounting screws, as shown in Figure 2, then set the screws aside for use in the next step.

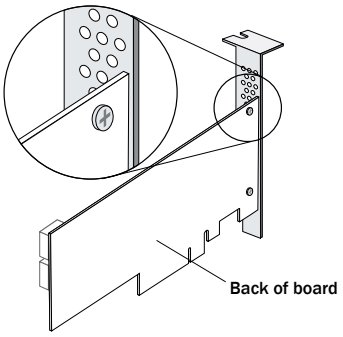

Figure 1

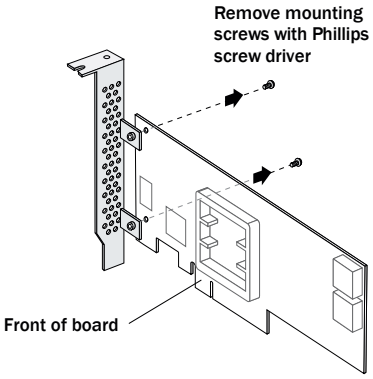

Figure 2

2. Attach the low-profile bracket to the adapter board. The low-profile bracket is installed on the *back* side of the adapter, with the mounting screws inserted from the front, as shown the Figure 3.

   Insert the screws through the holes on the front of the adapter, then fasten the screws to the bracket with a Phillips screw driver.

   Caution: The mount points on the low-profile bracket have a smooth or flat side and a raised side that looks like a spacer (see Figure 3). Be sure to install the bracket with the flat side against the adapter board and the raised side facing away from the adapter board.

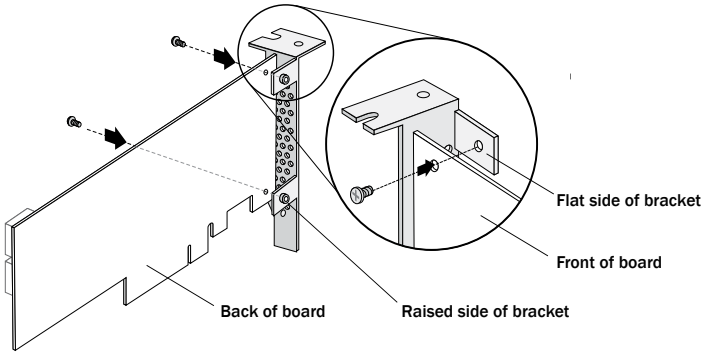

Figure 3

   Caution: The torque on the mounting screws should be a maximum of 3.0-4.0 lbf-in to avoid deformation. Be sure that the adapter is not bent after attaching the low-profile bracket to the adapter board.

Checking the Encryption Key

If your host bus adapter supports encryption (*Adaptec Series 7He only*), the encryption key is pre-installed on the adapter board. The location of the encryption key depends on the adapter model. Refer to the figures below for the location of the encryption key on your adapter board, then verify that the key is installed and seated securely.

Encryption key location on Adaptec 70165He

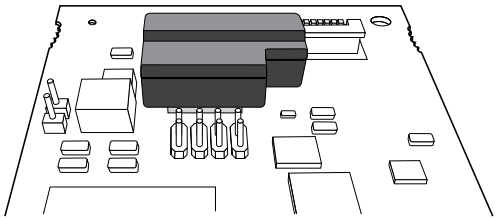

Encryption key location on Adaptec 71605He

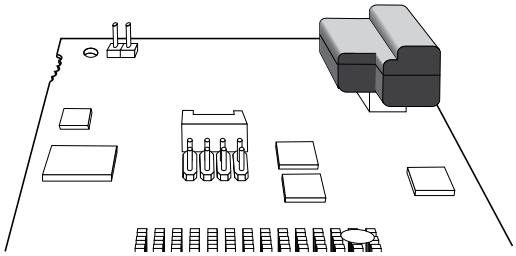

Selecting Disk Drives and Cables

Disk Drives

Your Adaptec HBA supports SAS and SATA disk drives, Solid State Drives (SSDs), Removable Media, and SAS tape drives. For more information about compatible drives, refer to the Adaptec Web site at www.adaptec.com/compatibility.

Cables

Depending on your HBA model and application requirements, you can use any of the cables listed below. Adaptec Series 7H/7He adapters use SAS HD cables. Adaptec Series 6H adapters use mini-SAS cables. For more information about cabling options for your HBA, visit the Adaptec Web site at www.adaptec.com/en-us/products/cables.

Note: We recommend using Adaptec SAS cables only.

Adaptec Series 7H/7He Cables	
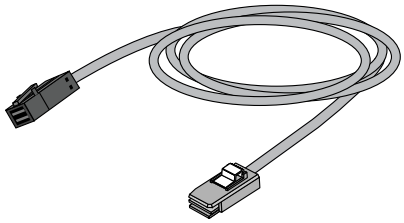	Internal SAS HD to mini-SAS (SFF-8643 to SFF-808 7)—Connects to a backplane or enclosure.
	External SAS HD to mini-SAS (SFF-8644 to SFF-808 8)—Connects to a backplane or enclosure.

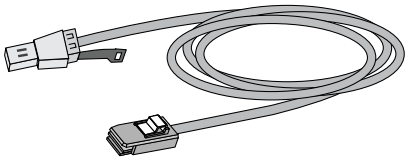

Adaptec Series 6H Cables

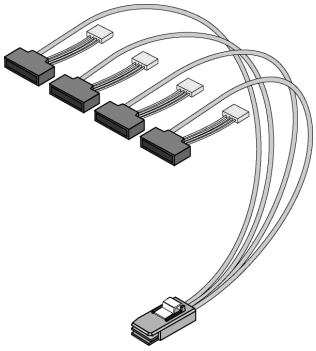

Internal mini-SAS with power (SFF-8087 to SFF-8482)—Connects to four SAS or SATA disk drives.

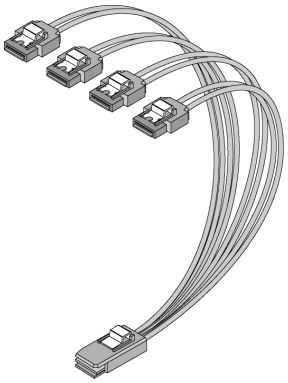

Internal mini-SAS to SATA fan-out (SFF-8087 to 4x SATA)—Connects to four SATA disk drives.

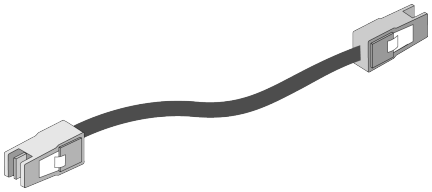

Internal mini-SAS to mini-SAS (SFF-8087 to SFF-8087)—Connects to a backplane or enclosure.

Installing the Host Bus Adapter

This section describes how to install the Adaptec Host Bus Adapter into your computer cabinet or server. Adaptec Host Bus Adapters come in two configurations:

- Adapters with internal connectivity
- Adapters with external connectivity

Follow the steps below to install your HBA and connect your internal or external storage devices.

Caution: Be sure to handle the adapter by its bracket or edges only.

1. Turn off your computer and disconnect the power cord and any network cables. Open the cabinet, following the manufacturer's instructions.
2. Select an available PCIe expansion slot that's compatible with your HBA and remove the slot cover, as shown in the figure below. (To check PCIe bus compatibility of your HBA, see About Your Host Bus Adapter on page 14.)

   Caution: Touch a grounded metal object before handling the adapter.

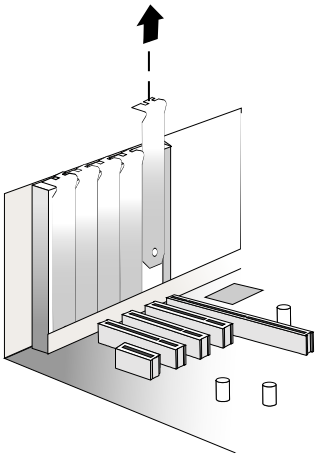

3. Insert the HBA into the expansion slot and press down gently but firmly until it clicks into place. When installed properly, the adapter should appear level with the expansion slot.

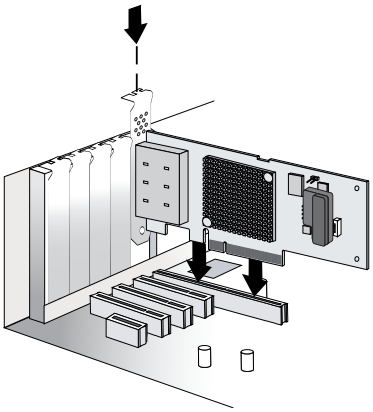

4. Secure the bracket in the expansion slot, using the retention device (for instance, a screw or lever) supplied with your computer.

5. (*Optional*) Connect your computer's disk activity LED cable to the LED connector on the HBA (marked on the figures in About Your Host Bus Adapter on page 14).

   Ensure that the positive lead of the LED cable (usually a red wire or a wire marked with a red stripe) is attached to pin 1.

6. Connect serial cables between the HBA and internal or external disk drives, as required:
   - For an HBA with external ports, connect serial cables between the HBA and external disk drives or enclosures:

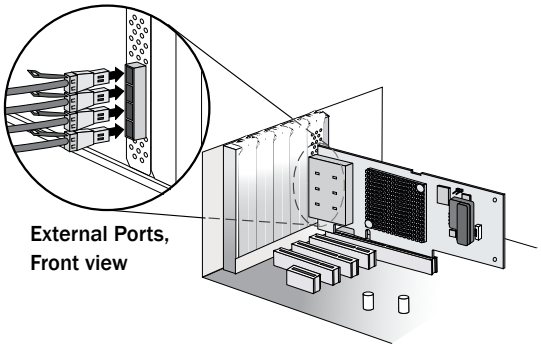

   - For an HBA with with internal ports, connect serial cables between the HBA and internal disk drives:

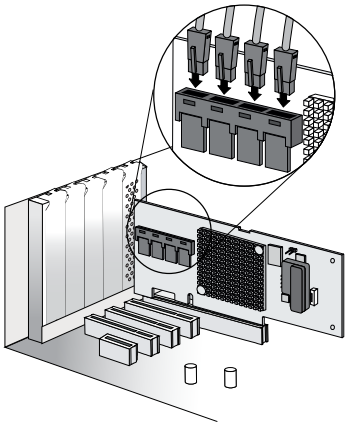

7. Close your computer cabinet, reconnect the power cord and network cables, then power up the system.

5 Installing the Driver and an Operating System

This chapter explains how to install your Adaptec HBA driver while installing the operating system.

Note: After you install the driver and OS, use the system BIOS to set the HBA as the boot device. For more information, see the Readme.

Note: To install the driver on an existing operating system, see Installing the Driver on an Existing Operating System on page 33.

Before You Begin

- Install your Adaptec Host Bus Adapter and connect internal or external disk drives (see Installing the Adapter and Disk Drives on page 21).
- Download drivers from the Adaptec Web site
- Create a driver disk (see the following section).

Note: For up-to-date operating system version support, visit the Adaptec Web Site at www.adaptec.com. From the main menu, select Support>Knowledgebase> Answers>Advanced Search. Select your adapter type, limit the category by OS Support, then click **Search**.

Creating a Driver Disk

Download the latest drivers from the Adaptec Web site, then create a driver disk by completing the steps below. You will need a USB flash drive to complete this task. If the driver binary is an iso image, use a writable CD instead of a flash drive.

To download drivers from the Adaptec Web site and create a driver disk:

1. Open a browser window, then type `start.adaptec.com` in the address bar.
2. Select your host bus adapter family (Series 7H, Series 6H, and so on) and adapter model.
3. Select your operating system version, for instance, Microsoft Windows Server 2012 x64 or Red Hat Enterprise Linux 6; then select the appropriate driver from the list.
4. Click **Download Now** and accept the license agreement.
5. When the download completes, extract the contents of the driver archive file to a temporary location. If the archive includes drivers for multiple operating system versions (Windows, for instance), each driver is stored in a separate folder, including one each for 32-bit and 64-bit operating systems.
6. Change to the folder for your operating system version, as needed.
7. For Windows and Linux, copy the driver binary file or the entire driver folder contents to a USB flash drive.
   For VMware ESXi 5.5, continue with Installing with VMware ESXi 5.5 on page 30.
8. Remove and label the driver disk, then continue with the installation instructions for your operating system.

Installing with Windows

Note: Use the following procedure for all supported Windows operating systems (for a complete list, see System Requirements on page 13). You will need your Windows Installation CD to complete this task.

To install the Adaptec HBA driver while installing Windows:

1. Insert your Windows CD, then restart the computer.
2. Follow the on-screen instructions to begin the Windows installation.
3. When prompted to specify a location for Windows, select **Load Driver**.
4. Insert the USB driver disk, browse to the driver location, then click **OK**.
5. When the Adaptec driver is found, click **Next**.

You may see the message 'No drives were found'. Repeat [3], [4] (browse to driver location), and [5]. On the second attempt, the driver will load successfully.

6. Click **Next** again to accept the default partition configuration, or refer to your Windows documentation to configure partitions manually.
7. Follow the on-screen instructions to complete the installation.

Installing with Red Hat Linux

Note: You will need your Red Hat installation CD to complete this task. You must have root privileges to install the driver image.

To install the Adaptec HBA driver while installing Red Hat Linux:

1. Insert the Red Hat installation CD, then restart your computer.
2. When the installation menu appears, press `Tab`, then insert the USB driver disk.
3. Press e to edit the "vmlinuz" line, add a `Space`, type the following command, then press `Enter`:

   ```
   linux dd
   ```

4. Press b to boot.
5. Select **Yes** to indicate that you have a driver disk, then select the driver image from the USB drive (typically, `/dev/sda1`).
6. Complete the installation following the on-screen instructions, then reboot.

Installing with SuSE Linux Enterprise Server

To install the Adaptec HBA driver while installing SuSE Linux:

1. Insert the SuSE Installation CD, then restart your computer.
2. When the SuSE installation selection screen appears, choose the type of installation you want, press the F6 key, then select **Yes** to indicate that you have a driver disk.
3. Insert the USB driver disk.
4. When prompted to "Please choose the Driver Update medium," highlight the USB partition, then select **OK**.
   If the "choose Driver Update medium" screen is displayed again, assume that the driver was accepted and select **Back**.
5. Complete the installation following the on-screen instructions, then reboot.

Installing with Ubuntu Linux

Note: You will need your Ubuntu Installation CD to complete this task. You must have root privileges to install the driver image.

To install the Adaptec HBA driver while installing Ubuntu Linux:

1. Insert the Ubuntu Installation CD, then restart your computer.
2. When the Welcome screen appears, select **Graphical Install**. Follow the on-screen instructions until the "Detect Disk" screen shows the message "No disk drive was detected."
3. Insert the USB driver disk, then go back to the "Detect Disk" screen and press `Enter`.
4. Type `CTRL+ALT+F2` to switch to the console, then press `Enter` to activate.
5. Assuming the USB drive is assigned to `/dev/sda1`, type the following commands to mount the USB drive:

   ```
   mkdir /mnt2
   mount /dev/sda1 /mnt2
   ```

6. From the root directory, copy the driver file from the USB drive, untar the archive, then run the pre-installation script:

```
cp -f /mnt2/pm80xx-<drv-version>-ubuntu<platform_name>.tgz /
tar -xvf pm80xx-<drv-version>-ubuntu<platform_name>.tgz
cd /pm80xx/pm80xx-<drv-version>-ubuntu
./pm80xx_debpre
```

7. Remove the USB drive.
8. Press CTRL+ALT+F1 to switch back to the installation screen, go back to the "Detect Disks" screen, then follow the on-screen prompts to continue the installation. (As you proceed, the installer will load the pm80xx driver and display the disk partition.)
9. When prompted to reboot the system, stop (do NOT reboot); press CTRL+ALT+F2 to switch to the console.
10. Check the kernel:

```
ls -l /target/boot
```

11. Assuming the kernel version is 3.5.0-23-generic, type the following commands from the root directory to complete the installation:

```
cp -a /pm80xx-<drv-version>-ubuntu /target/
chroot /target
cd pm80xx-<drv-version>-ubuntu/
./pm80xx_debpost 3.5.0-23-generic
./postscript 3.5.0-23-generic
```

12. Press CTRL+ALT+F1 to switch back to the installation screen, complete the installation, then reboot.

Installing with Debian Linux

Note: You will need your Debian Installation CD to complete this task. You must have root privileges to install the driver image.

To install the Adaptec HBA driver while installing Debian Linux:

1. Insert the Debian Installation CD, then restart your computer.
2. When the Welcome screen appears, select **Graphical Install**. Follow the on-screen instructions until the "Detect Disk" screen shows the message "No disk drive was detected."
3. Insert the USB driver disk, then go back to the "Detect Disk" screen and press Enter.
4. Type CTRL+ALT+F2 to switch to the console, then press Enter to activate.
5. Assuming the USB drive is assigned to /dev/sda1, type the following commands to mount the USB drive:

```
mkdir /mnt2
mount /dev/sda1 /mnt2
```

6. From the root directory, copy the driver file from the USB drive, untar the archive, then run the pre-installation script:

```
cp -f /mnt2/adp80xx-<drv-version>-deb<platform_name>.tgz /
tar -xvf adp80xx-<drv-version>-deb<platform_name>.tgz
cd adp80xx-<drv-version>-debian/
./adp80xx_debpre
```

7. Remove the USB drive.
8. Press CTRL+ALT+F5 to switch back to the installation screen, go back to the "Detect Disks" screen, then follow the on-screen prompts to continue the installation. (As you proceed, the installer will load the adp80xx driver and display the disk partition.)

9. When prompted to reboot the system, stop (do NOT reboot); press `CTRL+ALT+F2` to switch to the console.
10. Assuming the kernel version is 3.5.0-23-generic, type the following commands from the root directory to complete the installation:

```
cp -a /adp80xx-<drv-version>-debian /target/
chroot /target
cd adp80xx-<drv-version>-debian/
./adp80xx_debpost 3.5.0-23-generic
./postscript 3.5.0-23-generic
```

11. Press `CTRL+ALT+F5` to switch back to the installation screen, complete the installation, then reboot.

Installing with FreeBSD

Note: You will need your FreeBSD Installation CD to complete this task.

To install the Adaptec HBA driver while installing FreeBSD:

1. Insert the FreeBSD Installation CD.
2. Insert the USB driver disk.
3. Restart your computer. (Be sure to boot from the installation CD!)
4. When the FreeBSD start screen opens, select **2** for 'Escape to Loader Prompt'.
5. Type this command to locate the USB drive: `lsdev`
6. Unload the previous kernel, then load the new one (assuming the USB drive is `disk2s1`):

```
unload
load disk2s1:kernel
```

7. Load the driver:

```
load disk2s1:pmspcv.ko
```

8. Type this command: `boot`
9. Complete the FreeBSD installation, as usual. When finished, remove the installation CD, but *not* the USB driver disk, then reboot.

   Note: Be sure the system is configured to boot from the controller's bootable array, not the USB drive!

10. To ensure that the driver is loaded automatically as a module at boot time, repeat Steps [4]-[8], then complete the steps below.
11. Type this command to boot to the kernel: `boot`
12. Assuming the USB drive is `da1s1`, type this command to mount the drive:

```
mount -t msdosfs /dev/da1s1 /mnt
```

13. Install the driver package:

```
pkg_add /mnt/pms-<platform_name>.tgz
```

14. Reboot the computer.

Installing with VMware ESXi 5.5

Note: You will need a writable CD to complete this task. You must have administrator privileges to create the driver disk and install the driver image.

To install the Adaptec HBA driver with VMware ESXi 5.5, you must create a custom boot image using the VMware Image Builder tool. The VMware Image Builder is distributed as a snap-in component for vSphere PowerCLI, a command-line and scripting tool from VMware based on Microsoft PowerShell.

You can download PowerCLI from the VMware Download Center at www.vmware.com/downloads. To perform the installation, you will also need to download the VMware ESXi5.5 Standard Software Depot from the VMware Download Center.

> **Note:** In the following instructions, perform Step [1] through Step [7] on the Windows machine used to build the custom boot image, and Step [8] through Step [11] on the machine where you want to install the custom image. Be sure to install the prerequisite software first, including Powershell and Microsoft .NET 2.0, before you install PowerCLI or create the custom boot image.

To install the Adaptec HBA driver while installing VMware ESXi 5.5:

1. Download Microsoft PowerShell and Microsoft .NET 2.0 (if not installed on your machine already) and install on your Windows build machine. You can download PowerShell and Microsoft .NET from the Microsoft Download Center at www.microsoft.com/download.

   > **Note:** PowerShell is preinstalled on many Windows systems, including Windows Server 2012, Windows 7, and Windows 8.

2. Download and install vSphere PowerCLI on your Windows build machine. You can download PowerCLI from the VMware Download Center at www.vmware.com/downloads (for example, `VMware-PowerCLI-5.0.0-374833.exe`).
3. Run PowerShell as Administrator, then set the execution policy to Remote Signed:

   ```
   # Set-ExecutionPolicy RemoteSigned
   ```

4. Download the VMware ESXi5.5 Standard Software Depot (for example, `vmware-ESXi-5.5.0-1331820-depot.zip`) and store in a temporary location on your Windows build machine. You can download the software depot from the VMware Download Center at www.vmware.com/downloads. When you start the download, be sure to choose "ESXi Offline Bundle".

   > **Note:** You may need to provide account credentials to download the software depot from the VMware Web site.

5. Copy the driver binary to a temporary location on your Windows machine (C:\ESXi5.5-PMC-CustomISO in the following steps).

Options	Description
ESXi 5.5	adp80xx-esxi5.5-b1331820-1.2.0.10624.zip

6. Launch vSphere PowerCLI, then follow the steps below to create the custom boot image:
   a) At the PowerCLI prompt, add the VMware Image Builder snap-in by running the following cmdlet:

   ```
   # Add-PSSnapIn VMware.ImageBuilder
   ```

   > **Note:** You will see a message if the Image Builder snap-in is already installed. You can ignore this message.
   >
   > **Note:** Continue using PowerCLI in Steps [2] through [10].

   b) Add the VMware ESXi 5.5 Software Depots:

   ```
   # Add-EsxSoftwareDepot C:\ESXi5.5-PMC-CustomISO\vmware-ESXi-5.5.0-1331820-depot.zip
   ```

   where C:\ESXi5.5-PMC-CustomISO is the temporary folder on your Windows machine where the software depot is stored.

   c) Add the driver binary as a software depot:

```
# Add-EsxSoftwareDepot
C:\ESXi5.5-PMC-CustomISO\adp80xx-esxi5.5-b1331820-1.2.0.10624.zip
```

where C:\ESXi5.5-PMC-CustomISO is the temporary folder on your Windows machine where the software depot is stored.

d) Verify that the software depots are added:

```
# $DefaultSoftwareDepots
```

e) List ESX Image Profiles:

```
# Get-EsxImageProfile
```

You should see a display similar to this:

ESXi-5.5.0-1331820-no-tools
ESXi-5.5.0-1331820-standard

f) Create a copy of the standard image profile, using the -CloneProfile option:

```
# New-EsxImageProfile -CloneProfile ESXi-5.5.0-1331820-standard -Name "ESXi 5.5
Adaptec Series 7H"
```

where 'ESXi 5.5 Adaptec Series 7H' is the name of the image profile.

g) If prompted for vendor, type PMC-SIERRA and press `Enter`:

```
Vendor: PMC-SIERRA
```

h) Check if the new driver package is available:

```
# Get-EsxSoftwarePackage
```

i) Add the software package to the new image profile:

```
# Add-EsxSoftwarePackage -ImageProfile "ESXi 5.5 Adaptec Series 7H" -SoftwarePackage
 scsi-adp80xx
```

j) Export the custom ISO image:

```
# Export-EsxImageProfile -ImageProfile "ESXi 5.5 Adaptec Series 7H" -FilePath
C:\ESXi5.5-PMC-CustomISO\ESXi5.5-PMC-Sierra-Series-7H.iso -NoSignatureCheck
-ExportToISO
```

where -FilePath specifies the path to the custom iso image and 'ESXi 5.5 Adaptec Series 7H' is the name of the image profile.

7. Burn the custom ISO image to a writable CD.

> **Note:** Use whatever tool you prefer to burn the CD, such as an interactive (GUI-based) tool or a command line tool.

Remove the CD after you finish burning the image.

8. On the VMware ESXi machine, insert the custom boot CD, then restart your computer.

9. Follow the on-screen instructions to begin the VMware installation.

10. Complete the VMware installation, following the on-screen instructions.

11. Remove the custom boot CD, then reboot your computer.

6 Installing the Driver on an Existing Operating System

This chapter explains how to install your Adaptec HBA driver on an existing operating system. It assumes that the HBA and OS are installed and that you want to update the driver software.

Note: To install the driver while you're installing the operating system, see Installing the Driver and an Operating System on page 27.

Before You Begin

- Download drivers from the Adaptec Web site
- Create a driver disk (see following section)

Note: For up-to-date operating system version support, visit the Adaptec Web Site at www.adaptec.com. From the main menu, select Support>Knowledgebase> Answers>Advanced Search. Select your adapter type, limit the category by OS Support, then click **Search**.

Creating a Driver Disk

Download the latest drivers from the Adaptec Web site, then create a driver disk by completing the steps below. You will need a USB flash drive to complete this task. If the driver binary is an iso image, use a writable CD instead of a flash drive.

To download drivers from the Adaptec Web site and create a driver disk:

1. Open a browser window, then type `start.adaptec.com` in the address bar.
2. Select your host bus adapter family (Series 7H, Series 6H, and so on) and adapter model.
3. Select your operating system version, for instance, Microsoft Windows Server 2012 x64 or Red Hat Enterprise Linux 6; then select the appropriate driver from the list.
4. Click **Download Now** and accept the license agreement.
5. When the download completes, extract the contents of the driver archive file to a temporary location. If the archive includes drivers for multiple operating system versions (Windows, for instance), each driver is stored in a separate folder, including one each for 32-bit and 64-bit operating systems.
6. Change to the folder for your operating system version, as needed.
7. For Windows and Linux, copy the driver binary file or the entire driver folder contents to a USB flash drive.
   For VMware, use a remote copy utility to copy the driver to the local ESXi server; see Installing on VMware on page 35.
8. Remove and label the driver disk, then continue with the installation instructions for your operating system.

Installing on Windows

Note: Use the following procedure for all supported Windows operating systems (for a complete list, see System Requirements on page 13.)

To install the driver on Windows:

1. Start or restart Windows.
2. In the Windows Control Panel, start the Device Manager.
3. Insert the USB driver disk.
4. In the Storage Controllers section of Device Manager, right-click the Adaptec HBA, select **Update Driver Software**, then select **Browse my computer for driver software** and navigate to the driver folder on the USB driver disk.
5. Follow the on-screen instructions to load the driver.
6. When the installation is complete, remove the driver disk and restart your computer.

Installing on Red Hat Linux or SuSE Linux

To install the driver on Red Hat Linux or SuSE Linux:

1. Insert and mount the driver disk (assuming the USB drive is `/dev/sda1`):

   ```
   mount /dev/sda1 /mnt/usb
   ```

2. Install the module RPM:

   ```
   rpm -ivh /mnt/usb/yyy.rpm
   ```

   where *yyy.rpm* is the rpm file for your OS.

3. Reboot your computer.

Installing on Ubuntu Linux

Note: You must have root privileges to install the driver image.

To install the driver on Ubuntu Linux:

1. Update the Ubuntu package index:

   ```
   apt-get update
   ```

2. Insert and mount the driver disk (assuming the USB drive is `/dev/sda1`):

   ```
   mkdir /mnt2
   mount /dev/sda1 /mnt2
   ```

3. Install the DEB driver package:

   ```
   dpkg -i /mnt2/pm80xx-1.0.15-1-ubuntu64.deb
   apt-get -f /install
   ```

4. Reboot your computer.

Installing on Debian Linux

Note: You must have root privileges to install the driver image.

To install the driver on Debian Linux:

1. Update the Debian package index:

   ```
   apt-get update
   ```

2. Insert and mount the driver disk (assuming the USB drive is `/dev/sda1`):

   ```
   mkdir /mnt2
   mount /dev/sda1 /mnt2
   ```

3. Install the DEB driver package:

   ```
   dpkg -i /mnt2/pm80xx-1.0.15-1-debian64.deb
   apt-get -f /install
   ```

4. Reboot your computer.

Installing on FreeBSD

To install the driver on FreeBSD:

1. Start your computer.
2. Insert and mount the USB driver disk (assuming the USB drive is assigned to `/dev/fd1`):

   ```
   mount -t msdos /dev/fd1 /mnt
   ```

3. Copy the driver package to the /tmp directory:

   ```
   cp /mnt/pms-<platform_name>.tgz /tmp
   ```

4. Install the driver package:

   ```
   pkg_add /tmp/pms-<platform_name>.tgz
   ```

5. Remove the driver disk, then reboot your computer.

Installing on VMware

To copy the driver VIB file to the VMware ESXi server (in [2] below), you must use a remote copy utility, such as WinSCP, putty, or Linux scp.

> **Note:** You must remove the old driver before you can install the new one. You must have root privilege to install the new driver.

To install the driver on VMware:

1. At the VMware console screen, type these commands to remove the old driver:

   ```
   esxcli software vib list | grep -i scsi-adp80xx (list driver packages)
   esxcli software vib remove --vibname=scsi-adp80xx --maintenance-mode (remove
    package)
   ```

2. Using a remote copy utility, copy the driver VIB file to a local directory on the ESXi server. This example uses Linux scp to copy the driver to /tmp:

   ```
   scp /mnt/sda1/esx5.5/scsi-adp80xx-1.2.0.<drv-version>-1OEM.550.0.0.1331820.x86_64.vib
    root@<esx-server-ip>:/tmp
   ```

3. Stop operations:

   ```
   /etc/init.d/./sfcbd-watchdog stop
   ```

4. Install the VIB module:

   ```
   esxcli software vib install -f -v
   file:/tmp/scsi-adp80xx-1.2.0.<drv-version>-1OEM.550.0.0.1331820.x86_64.vib
   ```

5. Reboot your computer.

7 Solving Problems

This section provides basic troubleshooting information and solutions for solving problems with your Adaptec Host Bus Adapter.

Troubleshooting Checklist

If you encounter difficulties installing or using your Adaptec Host Bus Adapter, check these items first:

- With your computer powered off, check the connections to each disk drive, power supply, LED connector, and so on.
- Try disconnecting and reconnecting disk drives from the adapter.
- Check that your adapter is installed in a compatible PCIe expansion slot. To double-check the bus compatibility of your HBA, see About Your Host Bus Adapter on page 14.
- Ensure that your adapter is firmly seated and secured in the PCIe expansion slot.
- If your adapter is not detected during system boot, try installing it in a different compatible expansion slot. (See Installing the Host Bus Adapter on page 25 for instructions.)
- Did the driver install correctly?
- If you have external disk drives (or other devices), are they powered on?
- Check the Readme for compatibility issues and known problems.

If you are still unable to resolve a problem, you can find additional troubleshooting information and direction on the Adaptec Web site at www.adaptec.com or the Support Knowledgebase at ask.adaptec.com.

A Using the Adaptec HBA Configuration Utility

The Adaptec HBA Configuration utility is a BIOS-based utility that you can use to manage your HBA and the devices attached to it. It comprises a set of tools for viewing and modifying HBA properties and for formatting, verifying, and identifying disk drives.

Running the HBA Configuration Utility: Ctrl-A or uEFI/HII?

Your Adaptec Host Bus Adapter supports two interfaces to the BIOS-level adapter configuration options described in this chapter: Ctrl-A and uEFI/HII.

On servers that support the Unified Extensible Firmware Interface, or uEFI (version 2.10 or higher), the BIOS-level configuration options are presented with a uEFI/HII interface (Human Interaction Infrastructure), rather than Adaptec's legacy Ctrl-A interface. uEFI/HII provides an architecture-independent mechanism for initializing add-in cards, like the Adaptec Host Bus Adapter, and rendering contents to the screen in a uniform way.

To access the HBA configuration options with the Ctrl-A interface, start or restart your computer. When prompted, press **Ctrl+A**, then scan for and select your adapter (if you have more than one). The main menu is displayed.

Note: The Serial*Select* option is available only with the Ctrl-A interface.

In the uEF/HII interface, access to the HBA configuration options is provided through the server's standard BIOS. How you access the BIOS varies, depending on the server manufacturer, but typically it's started by simply pressing DEL. Once you enter setup, navigate to the "**Advanced**" menu, select your adapter from the list (PMC SAS/SATA 7805H in the example below), then select **"Device List**" to see a list of drives on the adapter.

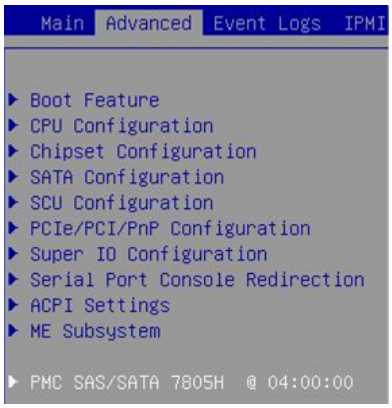

From that point on, the uEFI/HII menus and the Ctrl-A menus for configuring your HBA are similar. For example, the Disk Utilities menu contains the same three options for formatting, verifying, and identifying disk drives.

In both interfaces, all the tools are menu-based and instructions for completing tasks appear on-screen. Menus can be navigated using the arrows, Enter, Esc, and other keys on your keyboard.

This chapter provides instructions for navigating and completing tasks with the Ctrl-A interface. To complete tasks with the uEFI/HII interface:

- Refer to the on-screen instructions for keyboard navigation and selection options.

- Refer to the option descriptions in this chapter for details about individual HBA configuration settings.

Viewing HBA Properties

Note: This option is available only in the Ctrl-A interface.

To view general information about your HBA, start the HBA Configuration Utility, then select **Controller Properties** from the Serial*Select* menu.

Modifying HBA Settings

Note: This option is available only in the Ctrl-A interface.

To modify your HBA's general settings, start the HBA Configuration Utility, then select **Controller Configuration** from the Serial*Select* menu. You can set the options in the table below.

Option	Description
Runtime BIOS	When enabled, the BIOS presents attached devices to the system and allows bootability from the adapter. When disabled, the BIOS does not present attached devices to the system until the OS driver is loaded. Use this option to avoid compatibility issues or when booting from the adapter is not required. Default is **enabled**.
BBS Support	When enabled in systems that support BBS, the HBA presents attached bootable devices up to the BIOS for boot device selection. Default is **Device**.
POST Banner Display	When enabled, a banner is displayed during system Power On Self Test (POST). Default is **enabled**.
Ctrl-A Message Display	When enabled, the Ctrl-A prompt is displayed during POST. Default is **enabled**.
Physical Drive Display During POST	When enabled, connected disk drives are displayed during POST. Displaying the disk drives adds a few seconds to the overall POST time. Default is **enabled**.

Formatting and Verifying Disk Drives

You can use the disk utilities to low-level format or verify your disk drives. (New disk drives are low-level formatted at the factory and do not need to be low-level formatted again.)

Caution: Before you format a disk drive, back up all data. Formatting destroys all data on a disk drive.

To format or verify a disk drive:

1. Start the HBA Configuration Utility (see Running the HBA Configuration Utility: Ctrl-A or uEFI/HII? on page 37).
2. Select **Disk Utilities** from the main menu.
3. Select a drive from the device list and press `Enter`.
4. Select **Format Disk** or **Verify Disk**.
5. Select **Yes**.

Identifying Disk Drives

You can use the disk utilities to identify a disk drive by blinking its LED, including drives in an expander (SES mode) or a SGPIO backplane.

Note: SGPIO mode is available only in the uEFI interface.

To identify a disk drive:

1. Start the HBA Configuration Utility (see Running the HBA Configuration Utility: Ctrl-A or uEFI/HII? on page 37).
2. Select **Disk Utilities** from the main menu.
3. Select a drive from the device list and press `Enter`.

   The BIOS determines if the drive is direct-attached, attached to an expander, or on a backplane.
4. For a direct-attached drive, select **Indicate LED**, select 'Blink LED on Single Drive' or 'Blink LEDs on All Drives', then press `Enter`.
5. For a SES mode drive, select 'Blink LED on Single SES Slot', then select the slot number; or select 'Blink LEDs on All SES Slots'. Then press `Enter`.
6. When you have finished checking the drive, press any key to stop blinking the LED.

Updating the HBA Firmware

Note: This option is available only in the uEFI interface.

Use this option to flash the HBA's firmware.

To update the HBA firmware:

1. Copy the firmware binary file (.bin) to a USB flash drive, then connect the USB drive to the machine. Alternatively, copy the firmware binary to a known location on your machine.
2. Start the HBA Configuration Utility in uEFI mode (see Running the HBA Configuration Utility: Ctrl-A or uEFI/HII? on page 37), select the HBA you want to flash, then press `Enter`.
3. Select **Flash Update** from the uEFI menu.
4. Select the storage device where the firmware binary file is located (the USB drive, for instance), navigate the folder hierarchy, as needed, then select the firmware binary file.
5. Select **Update Flash**, then press **Y** to continue.

   The firmware is sent to the adapter and the system displays the progress of the operation.
6. When the update is complete, reboot the server.

B Using the ADP Command Line Utility

This appendix explains how to use of the ADP command line utility to manage your Adaptec HBA. This utility allows you to:

- Flash the HBA firmware image
- Obtain information about the HBA
- Show PHY status and error counts
- List devices on the HBA
- Reset devices and LUNs
- Manage SGPIO settings
- Send raw SMP and CDB commands

Installing the Command Line Utility

The ADP command line utility is supported on Windows, Linux, FreeBSD, and VMware Guest OSs. The executable is available for download at the Adaptec Web site, at start.adaptec.com.

Starting the Command Line Utility

1. To start the command line utility, enter one of the following commands:

Options	Description
Windows	`<install_dir>\Adp80xxapp.exe`
Linux	`/usr/<install_dir>/Adp80xxapp`

where install_dir is the directory where the utility executable is located.

Note: On Windows systems, Adp80xxapp requires Admin privileges.

2. To see a list of available commands, type `./Adp80xxapp help` at the prompt.

ADP Commands

The following commands are available in the ADP utility. The commands are described on the following pages, in alphabetical order.

Table 1: ADP Commands

devlist	phystatus
errorlog dump (various)	send_cdb (Windows), sendCDB (Linux)
eventlog	send_smp
fwflash	send_tmf dr (Windows), tmf Device reset (Linux)
info	send_tmf lr (Windows), tmf LUN reset (Linux)
phyerr	sgpio

Note: In the command syntax descriptions, <> indicates a required parameter and [] indicates an optional parameter.

devlist

Description

Lists devices connected to the adapter, including the device type, link rate, Phy ID, LUNs, and SAS address. In Windows:

- For expander-connected devices, the PhyID shows the Phy number of the expander to which the device is attached.
- For SATA drives connected directly to the adapter, zeros are displayed (since SATA drives don't SAS addresses).
- For SATA drives in expander, the expander-generated SAS address is displayed.

In Linux:

- PhyID shows the Phy number of the adapter for all devices in the expander.
- For SATA drives connected directly to the adapter, WWN of the controller + PhyId is displayed.
- For SATA drives in expander, the expander-generated SAS address is displayed.

Syntax

```
Adp80xxapp devlist <controller index>
```

Parameters

controller index

The HBA ID number.

Examples

```
Adp80xxapp devlist 0

Number of controllers = 1
CONTROLLER_ADDRESS | VENDOR_ID | DEVICE_ID | FIRMWARE_REVISION | BIOS_VERSION
0000:01:00.0         0x9005        0x8074        03.04.58.03      1.2.0.10600
card index : 0

Device  Type            Speed        Phy     Luns    SASAddress
1       SSP             6Gbps        1       1       50 00 c5 00 41 6f 21 49
2       Direct SATA     6Gbps        0       1       50 00 0d 11 06 96 e0 00
3       Direct SATA     1.5Gbps      2       1       50 00 0d 11 06 96 e0 02
```

errorlog dump (various)

Description

Dumps various error logs to a file, including fatal and non-fatal errors, GSM, and inbound and outbound queues.

Note: This command is supported on Linux and FreeBSD systems only.

Linux Syntax

```
Adp80xxapp <Options> <card no> <output filename>
```

Parameters

Options

fatal -- fatal error dump
nonfatal -- non-fatal error dump
gsm -- complete GSM dump
ib_log -- inbound queue dump
ob_log -- outbound queue dump

card no

The HBA card number.

output filename

Path to output file.

Examples

```
Adp80xxapp.exe fatal 0 fatal_error.txt
Adp80xxapp.exe gsm 0 gsm_dump.txt
Adp80xxapp.exe ib_log 0 inbound_queue.txt
Adp80xxapp.exe ob_log 0 outbound_queue.txt
```

eventlog

Description

Dumps the event log for IO processors to a file.

Note: This command is supported on Linux and FreeBSD systems only.

Linux Syntax

```
Adp80xxapp eventlog <card no> <iop> <output filename>
```

Parameters

card no

The HBA card number.

iop

The IO processor ID number.

output filename

Path to output file.

Examples

```
Adp80xxapp eventlog 0 1 eventlog.txt
```

fwflash

Description

Flashes the HBA firmware. Use '`Adp80xxapp info`' to confirm that the image flashed correctly.

Windows Syntax

```
Adp80xxapp fwflash <id> <firmware-image-name>
```

Linux Syntax

```
Adp80xxapp fwflash <pci_slot_addr> <firmware-image-name>
```

Parameters

id

The HBA ID number.

pci_slot_addr

The PCI slot address. Use '`Adp80xxapp info`' to obtain the slot address.

firmware-image-name

The firmware image name. For Windows systems, place images in the directory where the ADP executable is located. For Linux systems, place images in the /lib/firmware directory.

Examples

```
Windows:
Adp80xxapp fwflash 0 SPCV6G_2085501.bin

Linux:
Adp80xxapp fwflash 0000:04:00.0 firmware.bin
```

info

Description

Provides information about an adapter, including:

- Firmware revision number
- BIOS version
- Bus number
- Slot number
- Device ID
- Vendor ID

The identifier varies from 0 to N-1, where N is the total number of adapters in the system.

Syntax

```
Adp80xxapp info
```

Examples

```
Adp80xxapp info
```

phyerr

Description

Displays PHY error counts for the physical devices on an adapter.

Syntax

```
Adp80xxapp phyerr <controller index>
```

Parameters

controller index
The HBA ID number.

Examples

```
Adp80xxapp phyerr 0
```

phystatus

Description

Displays the PHYs on an adapter, including the PHY state, link rate, port ID, and port status.

Syntax

```
Adp80xxapp phystatus <controller index>
```

Parameters

controller index
The HBA ID number.

Examples

```
Adp80xxapp phystatus 0
```

send_cdb, sendCDB

Description

Sends raw SCSI CDB commands to a device. Between 6 and 256 command bytes (two hex digits each) can be specified. Bidirectional commands are accepted.

Windows Syntax

```
Adp80xxapp send_cdb <Options> <device> <cdb frame>...
```

Linux Syntax

```
Adp80xxapp sendCDB <Options> <device> <cdb frame>...
```

Parameters

Options

-h, --help Show this message and exit
-i, --infile=IFILE Read data to send from IFILE (default: stdin)
-n, --nosense Don't display sense information
-o, --outfile=OFILE Write binary data to OFILE (default: hexdump to stdout)
-r, --request=RLEN Request up to RLEN bytes of data (data-in)
-w, --write=SLEN Write SLEN bytes of data (data-out)
-v, --verbose Verbose output
-V, --version Show version information and exit

device

The device ID.

cdb frame

The CDB frame.

Examples

```
Serial No Request on Physical Drive 0 (Windows):
Adp80xxapp.exe send_cdb -r 1k pd0 12 00 00 00 60 00

Read Capacity Command (Linux):
Adp80xxapp sendCDB -r 16 /dev/sdb 25 00 00 00 00 00 00 00 00

SCSI Read Capacity Command (Windows):
Adp80xxapp.exe send_cdb -r 512 -o output.bin pd1 25 00 00 00 00 00 00 00 00

Test Unit Ready Command (Linux):
Adp80xxapp sendCDB -r 16 /dev/sdb 00 00 00 00 00 00
```

send_smp

Description

Sends raw smp commands to the HBA.

Syntax

```
Adp80xxapp send_smp <exp_sas_address> <card no> <smp frame>
```

Parameters

exp_sas_address

The SAS address.

card no

The HBA card number.

smp frame

The SMP frame.

Examples

```
General Report:
Adp80xxapp send_smp 500304800085f93f  0  40 00 00 00 00 00 00 00

Manufacturer Report:
Adp80xxapp send_smp 500304800085f93f 0 40 01 00 00 00 00 00 00

Phy SATA Report:
Adp80xxapp send_smp 500304800085f93f 0 40 12 00 02 00 00 00 00 00 10 00 00 00 00 00 00

Discover Report:
Adp80xxapp send_smp 500304800085f93f 0 40 10 00 02 00 00 00 00 00 10 00 00 00 00 00 00
```

send_tmf dr, tmf device_reset

Description

Resets a device.

Windows Syntax

```
Adp80xxapp send_tmf <Card no.> dr <pathId> <targetId>
```

Linux Syntax

```
Adp80xxapp tmf device_reset <device_sas_address> <controller_number>
```

Parameters

Card no., controller_number
The HBA device ID.

pathId
Bus number where the controller is enumerated at the host.

targetId
Target number where the device is attached to a bus.

device_sas_address
Device SAS address.

Examples

```
Reset Device 0 (Windows):
Adp80xxapp.exe send_tmf 0 dr 0 0

Reset Device 0 (Linux):
Adp80xxapp tmf device_reset 5000c500005bec05  0
```

send_tmf lr, tmf lun_reset

Description

Resets a LUN.

Windows Syntax

```
Adp80xxapp send_tmf <Card no.> lr <pathId> <targetId> <lun>
```

Linux Syntax

```
Adp80xxapp tmf lun_reset <device_sas_address> <lun_number> <controller_number>
```

Parameters

Card no., controller_number
The HBA device ID.

pathId
Bus number where the controller is enumerated at the host.

targetId
Target number where the device is attached to a bus.

device_sas_address
Device SAS address.

lun, lun_number
Logical unit number.

Examples

```
Reset LUN 0 (Windows):
Adp80xxapp.exe send_tmf 0 lr 0 2 0

Reset LUN 0 (Linux):
Adp80xxapp tmf lun_reset 5000c500005bec05 0 0
```

sgpio

Description

Sets SGPIO LED configuration interactively, gets LED status and configuration details.

> **Note:** The SGPIO command can control the device attached to the first eight Phys on the adapter only.

Syntax

```
Adp80xxapp sgpio <card no.> <set|get> <Phy No> <Led Type>
Adp80xxapp sgpio <card no.> <setall|getall|setcfg|getcfg>
```

Parameters

card no.
The HBA Id.

Phy No
The PHY number

Led Type
Activity:0, Locate:1, Error: 2

Examples

```
Adp80xxapp sgpio 0 set 0 1
   ...
   Enter opcode(0: off, 1: on, 2: blink): 2
   Enter blink pattern (2 or 3): 3
   ...
   SGPIO set operation completed successfully

Adp80xxapp sgpio 0 setall
   ...
   Activity LED
   Enter opcode(0: off, 1: on, 2: blink): 1
   Locate LED
   Enter opcode(0: off, 1: on, 2: blink): 2
   Enter blink pattern (2 or 3): 3
   Error LED
   Enter opcode(0: off, 1: on, 2: blink): 2
   Enter blink pattern (2 - 7): 7
   ...
   SGPIO setall operation completed successfully

Adp80xxapp sgpio 0 setcfg
   ...
   Enter GPIO cfg (0 or 1) : 1
   Set Cfg1 menu:
   1. Blink Generator Rate A
   2. Blink Generator Rate B
   3. Maximum Activity On
   4. Force Activity Off
   5. Stretch Activity On
   6. Stretch Activity Off
   Choose the field that needs to be changed : 3
   Enter the Maximum Activity On (0 - 15) : 2
   ...
   SGPIO setcfg operation completed successfully

Adp80xxapp sgpio 0 get 3 2

Adp80xxapp sgpio 0 getall

Adp80xxapp sgpio 0 getcfg
```

C Adapter LED Connector Quick Reference

This section provides a quick reference for Adaptec HBA drive activity LED connectors.

Adaptec SAS Adapter 70165H/70165He/71605H/71605He LED Connector Specification

2278500-R	ASA-70165H SGL
2278200-R	ASA-70165He SGL
2278300-R	ASA-71605H SGL
2278100-R	ASA-71605He SGL

- Adaptec SAS Adapter 70165/71605 Activity LED Header Connector: Molex 015-91-3086 or equivalent
- Activity LED Header Mating Cable Connector: 6 pin 2.54mm pitch connector, Molex/Amp equivalent

J4:

J4 Pin Number	Signal	Description	Mating Cable Pin Number
1	PHY_ACT0_LED	LED Cathode	2
2	+3.3V	LED Anode	1
3	PHY_ACT1_LED	LED Cathode	4
4	+3.3V	LED Anode	3
5	PHY_ACT2_LED	LED Cathode	6
6	+3.3V	LED Anode	5
7	PHY_ACT3_LED	LED Cathode	8
8	+3.3V	LED Anode	7

Adaptec SAS Adapter 7085H/7805H LED Connector Specification

2278400-R	ASA-7085H SGL
2280800-R	ASA-7805H SGL

- Adaptec SAS Adapter 7085/7805 Activity LED Header Connector: Molex 015-91-3040 or equivalent
- Activity LED Header Mating Cable Connector: 6 pin 2.54mm pitch connector, Molex/Amp equivalent

J4:

J4 Pin Number	Signal	Description	Mating Cable Pin Number
1	PHY_ACT0_LED	LED Cathode	2
2	+3.3V	LED Anode	1
3	PHY_ACT1_LED	LED Cathode	4
4	+3.3V	LED Anode	3

D Safety Information

To ensure your personal safety and the safety of your equipment:

- Keep your work area and the computer clean and clear of debris.
- Before opening the system cabinet, unplug the power cord.

Electrostatic Discharge (ESD)

> **Caution:** ESD can damage electronic components when they are improperly handled, and can result in total or intermittent failures. Always follow ESD-prevention procedures when removing and replacing components.

To prevent ESD damage:

- Use an ESD wrist or ankle strap and ensure that it makes skin contact. Connect the equipment end of the strap to an unpainted metal surface on the chassis.
- Avoid touching the adapter against your clothing. The wrist strap protects components from ESD on the body only.
- Handle the adapter by its bracket or edges only. Avoid touching the printed circuit board or the connectors.
- Put the adapter down only on an anti-static surface such as the bag supplied in your kit.
- If you are returning the adapter to Adaptec by PMC Product Support, put it back in its anti-static bag immediately.

If a wrist strap is not available, ground yourself by touching the metal chassis before handling the adapter or any other part of the computer.

E Technical Specifications

Environmental Specifications

Note: Your Adaptec Host Bus Adapter requires adequate airflow to operate reliably. The recommended airflow is 200 LFM (linear feet per minute), minimum. Forced airflow is **required**.

Ambient temperature with forced airflow	0 °C to 55 ° C
Relative humidity	10% to 90%, non-condensing
Altitude	Up to 3,000 meters

Note: Ambient temperature is measured 1” from the HBA processor.

DC Power Requirements

Bus Type	Description	Requirements
PCIe	Ripple and noise	**Adaptec Series 7H/7He Adapters:** 3.3V: 50 mV peak-to-peak (max) 12V: 120 mV peak-to-peak (max) **Adaptec Series 6H Adapters:** 3.3V : 5.5 mV peak-to-peak (max) 12V : 80mV peak-to-peak (max)
PCIe	DC Voltage	3.3V ± 9%, 12V ± 8%

Current Requirements

Adaptec Model	Typical Current
Adaptec SAS HBA 70165H/70165He	0.17A @ 3.3 VDC; 1.25A @ 12.0 VDC
Adaptec SAS HBA 7085H	0.17A @ 3.3 VDC; 1.25A @ 12.0 VDC
Adaptec SAS HBA 71605H/71605He	0.17A @ 3.3 VDC; 1.25A @ 12.0 VDC
Adaptec SAS HBA 7805H	0.17A @ 3.3 VDC; 1.25A @ 12.0 VDC
Adaptec SAS HBA 6405H	0.09A @ 3.3 VDC; 0.7A @ 12.0 VDC
Adaptec SAS HBA 6805H	0.09A @ 3.3 VDC; 0.7A @ 12.0 VDC

Index

O

R

S

T

U

V

W

PMC-Sierra, Inc.
1380 Bordeaux Drive
Sunnyvale, CA 94089 USA

Part Number: CDP-00279-04-A Rev A